Data sheet DS/AK100–EN Rev. J

AK100 Series
ATEX Compliant Gas Analyzer System for Hydrogen-cooled Alternators

Superior technology and quality from the world leader in hydrogen measurement

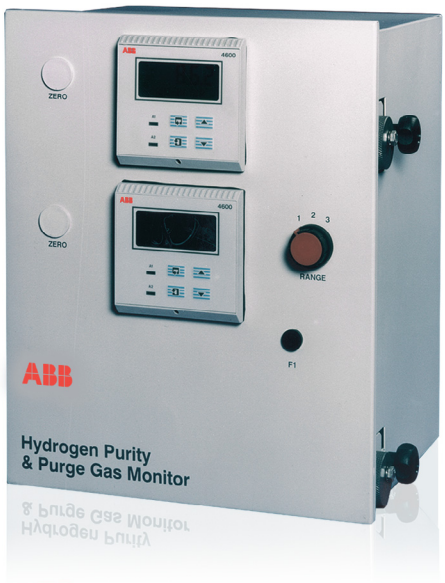

ATEX compliant
— intrinsically safe to Ⓔx II (1)G CENELEC EEx ia IIC T4

Safety
— early warning of hazardous hydrogen/air mixtures

Cost savings
— maintenance of hydrogen purity ensures efficient cooling of the alternator to optimize plant performance

Choice
— separate display units for hydrogen purity and purge gas for ease of use and duplicate systems for enhanced security

Low cost of ownership
— no moving parts and just one consumable item ensure minimal maintenance and running costs

Confidence
— ABB has over 80 years experience of katharometer design and operation

Power and productivity for a better world™

General

The AK100 range of instruments is designed to provide reliable and accurate hydrogen purity and purge gas measurement to ensure the safe and efficient operation of hydrogen cooled turbo-generators.

Hydrogen Purity

Modern high capacity turbo-generators need to be cooled efficiently. Hydrogen, with a thermal conductivity of about seven times that of air, is in general use as the coolant.

Any drop in hydrogen purity during operation of the machine has two adverse effects:

The first, and most important, is to compromise the safe operation of the generator. Accurate measurement of hydrogen purity is essential to provide an early warning of a potentially explosive mixture of hydrogen and air.

The second is the economic impact of reduced efficiency. To increase plant performance and control generating cost per megawatt, turbine generators must perform with optimum efficiency. A drop in hydrogen purity causes additional windage losses and consequently reduces generator efficiency.

Purge Gas

To complete the system the AK100 Series also incorporates a purge gas analyzer.

During commissioning and de-commissioning of a system it is essential that the hydrogen is safely introduced and removed from the turbo-generator.

To avoid an explosive mixture of air and hydrogen during commissioning, air must first be purged from the system by an inert gas; carbon dioxide is in common use for this purpose although argon or nitrogen are gaining popularity. The hydrogen coolant is then introduced and replaces the purge gas.

To de-commission the turbo-generator the purge sequence is reversed.

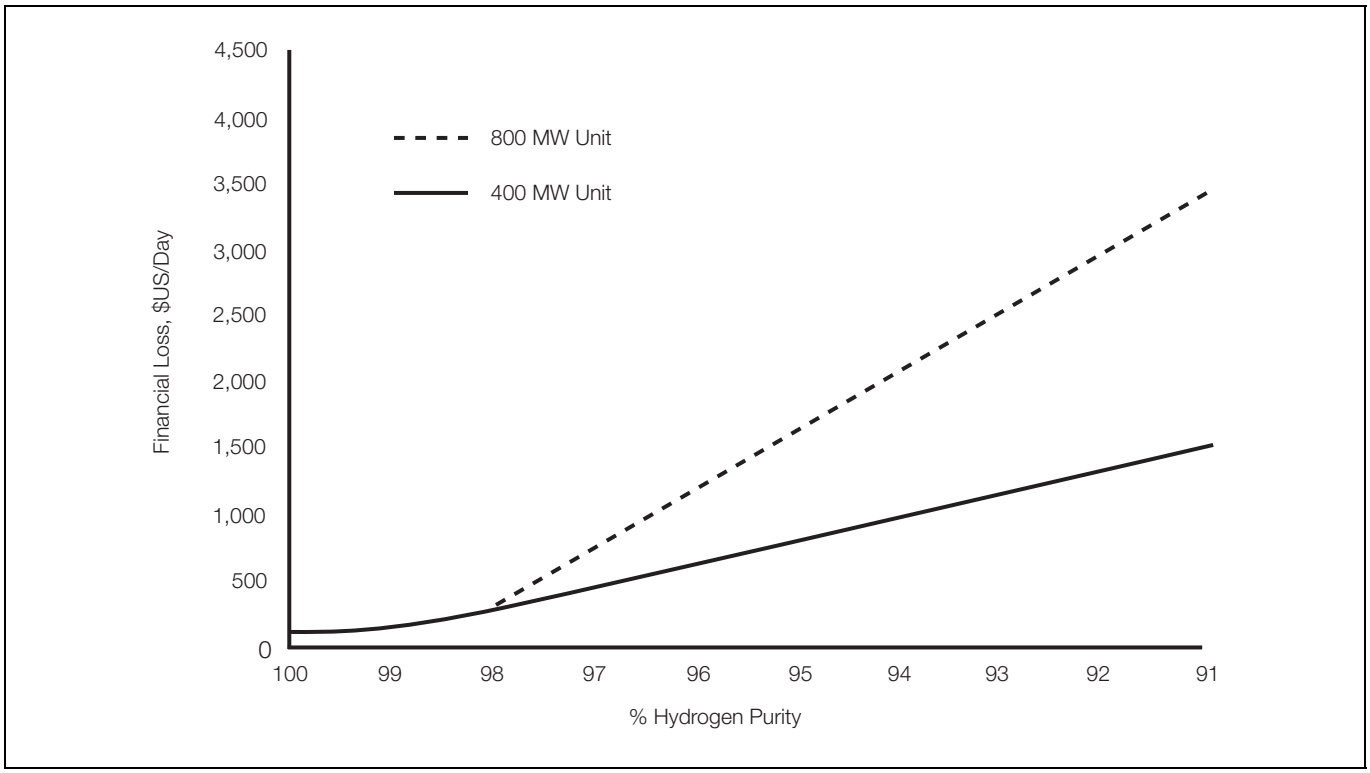

Typical Cost of Decreased Hydrogen Purity

Katharometer

Principle of operation

The AK100 range of gas analyzers utilize thermal conductivity as its principle for measurement. When a constant current is passed through an electrical conductor surrounded by gas in a chamber, the temperature rises to a point of thermal equilibrium. Provided radiation, convection and end-conduction losses are minimized, the temperature of the conductor depends upon the heat loss by conduction through the gas. The temperature attained is therefore related to the thermal conductivity of the surrounding gas and hence the resistance of the wire is a function of the thermal conductivity.

The katharometer comprises a Wheatstone bridge, each arm of which contains a fine, glass-coated, platinum wire. One pair of parallel arms is sealed in a reference gas of known thermal conductivity and the other pair is exposed to the sample gas. A constant current is passed through the bridge network. Any difference between the thermal conductivities of the reference and sample gases causes an imbalance of the bridge. This imbalance is a function of the difference in thermal conductivities of the two gases so the analyzer can be calibrated directly in terms of the percentage of one gas to another.

Product description

A complete system comprises:

- Display Monitor
- One (or two) gas analysis panels
- One (or two) power supply units

Display Monitor

The 6553 Display Monitor includes one or two 4689 Digital Transmitters, the range selector switch (excluding AK104), katharometer remote zero adjustment control and Zener diode safety barriers

Digital Transmitters

The 4600 Series universal transmitter provides the operator interface and communication to other devices. The signal from the sensing system is converted by the transmitter and the measurement is presented on a large, easy-to read, backlit liquid crystal display. This display is used in conjunction with the four tactile membrane keypads to prompt the user through the programming procedures. The transmitter is fitted with two-step alarms for falling hydrogen purity.

Zener Barrier Devices

Zener barrier devices are included in the display monitor enclosure to prevent any dangerous electrical feedback from the transmitters to the hazardous area.

Power supply

The 4234 power supply units provide the analyzer assemblies with an intrinsically safe, stable constant current. These power units must be installed in a 'safe' area but the current output from them may be transmitted to the Katharometers in the hazardous area.

Gas Analysis Panel

Gas analysis assemblies, 6540 (low pressure variant) and 6548 (high pressure variant) are fitted with a thermally lagged Katharometer, a needle flow-control valve, a flow gauge and a drying chamber.

Sample Gas Low-Flow Alarms

(Only available when system is ordered complete with Cubicle)

Optional intrinsically safe, sample-gas low-flow alarms can be fitted in the Cubicle and connected to the sample gas flow meter. These are used to warn operators of leaks or blockages in the sample line.

AK101 Hydrogen Purity and Purge Gas Analyzer

Industry standard version comprising:

Two gas analysis panels, the first measuring hydrogen purity and the second measuring the two purge gas ranges.

Two power supply units.

One display monitor containing two digital transmitters. The upper transmitter displays hydrogen purity and the lower transmitter displays the two purge gas ranges. The range selector switch controls the range to be displayed and deactivates the unused transmitter display as appropriate.

AK102 Dual 3-Range Analyzer

100% redundancy and validation version comprising:

Two gas analysis panels each measuring hydrogen purity plus the purge gas ranges.

Two power supply units.

One display monitor containing two digital transmitters. Both the upper and the lower digital transmitters display the hydrogen purity range and the two purge gas ranges. Each digital transmitter has its own range selector switch to control the range to be displayed.

AK103 Single 3-Range Analyzer

Simple solution for purity and purge measurement comprising:

One gas analysis panel measuring hydrogen purity plus the purge gas ranges.

One power supply.

One display monitor containing one digital transmitter that displays the hydrogen purity range and the purge gas ranges. The range selector switch controls the range to be displayed.

AK104 Hydrogen Purity Analyzer

Single range version comprising:

One gas analysis panel measuring hydrogen purity.

One power supply unit.

One display monitor containing a single digital transmitter that displays hydrogen purity. Designed for applications where the purge gas cycle is controlled by other means and measurement of purge gas is not required.

Operating Range

Range for hydrogen purity:

85 to 100% H_2

80 to 100% H_2 user selectable

Range for Purge gas:

0 to 100% hydrogen in purge gas *

0 to 100% air in purge gas *

Alternative Range for Hydrogen Purity:

100% to 85% H_2

100% to 80% H_2 user selectable

CENELEC EEX ia IIC T4 approved
Does not conform to ATEX directive

* Carbon dioxide standard; argon or nitrogen also available.

Cubicles

When simplified installation is required, the 6553 display monitor and 4234 power supplies can be supplied in a wall-mount enclosure.

Access to select ranges and program the 4689 display units is via the enclosure's glass panel door. The rear hinged section houses the power supply units and the optional flow alarm relays and miniature circuit breakers (MCBs).

Analyzer Panels

The analyzer panels are available with options for use on low pressure or high pressure, gas sample systems (see system diagrams following).

The 6540–203 panels are suitable only for use on systems where the gas sample is vented to atmosphere and the pressure in the analyzer panel is therefore only marginally above atmospheric pressure (1 bar absolute).

For applications where the gas sample may be returned to the generator cooling system at an elevated pressure, the 6548–000 analyzer panel must be used. This panel is equipped with fittings suitable for such duties and is pressure tested to 10 bar (gauge).

Note. As no certification exists for measurements at pressures above 1bar absolute (nominal), it must be understood that the stated I.S. certification does not cover use at higher pressures.

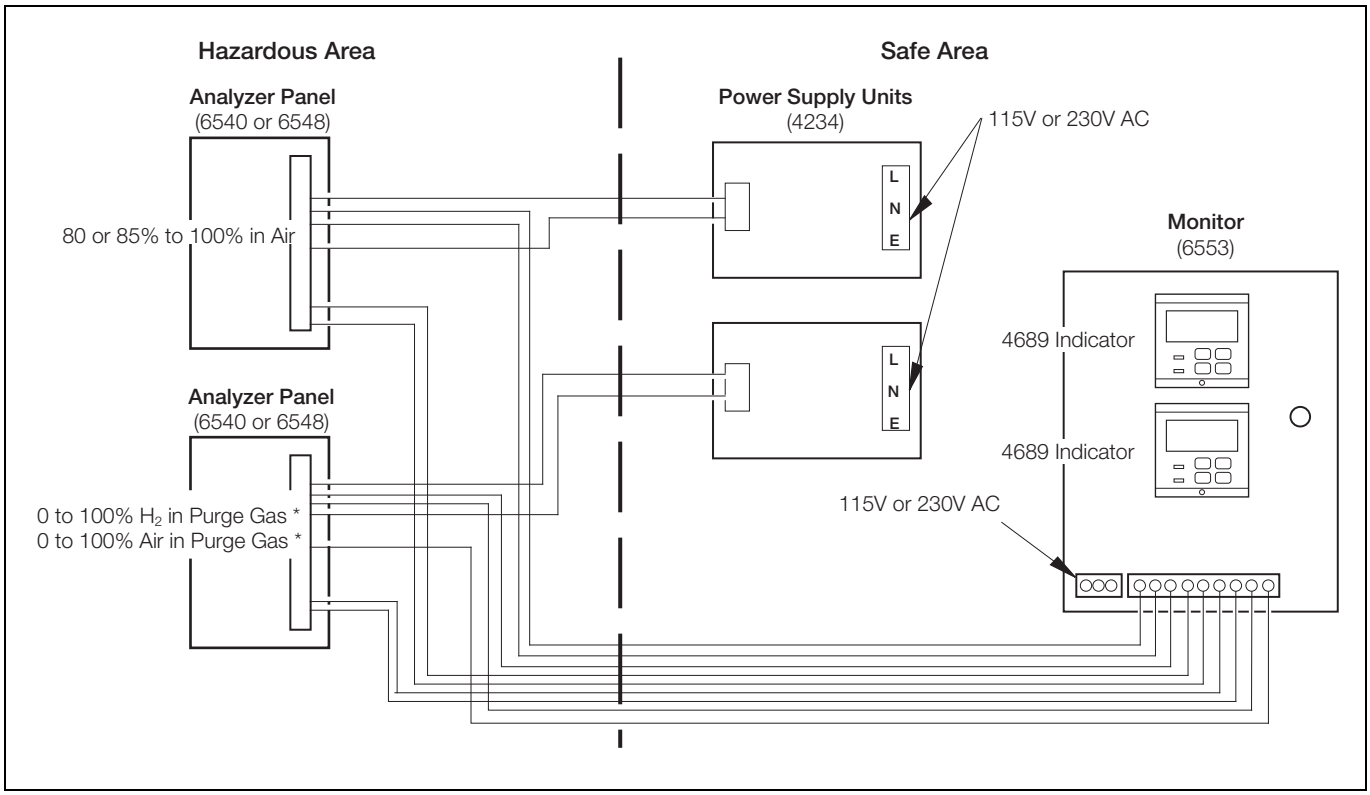

AK101 Purity and Purge Gas Analyzer System

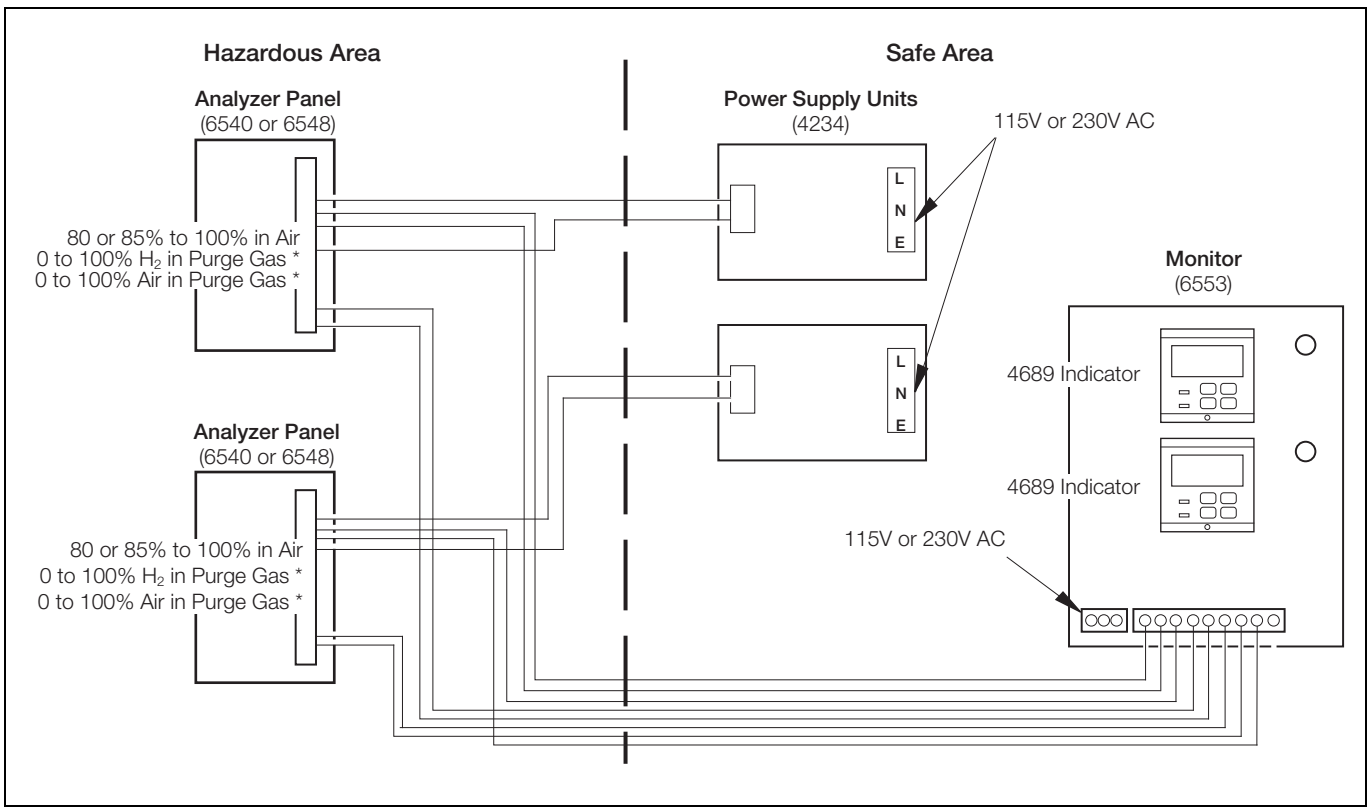

AK102 Dual 3-Range Analyzer System

* Carbon dioxide standard; argon or nitrogen also available

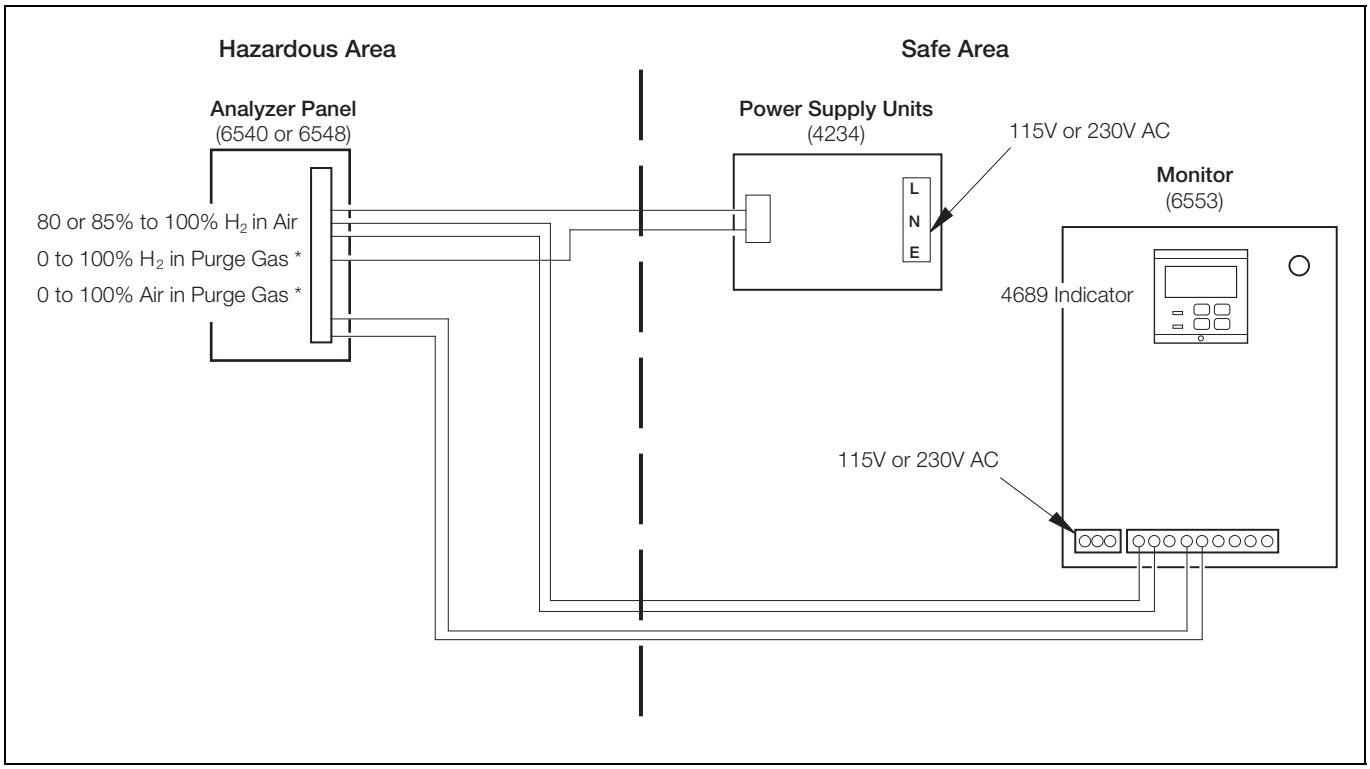

AK103 Single 3-Range Analyzer System

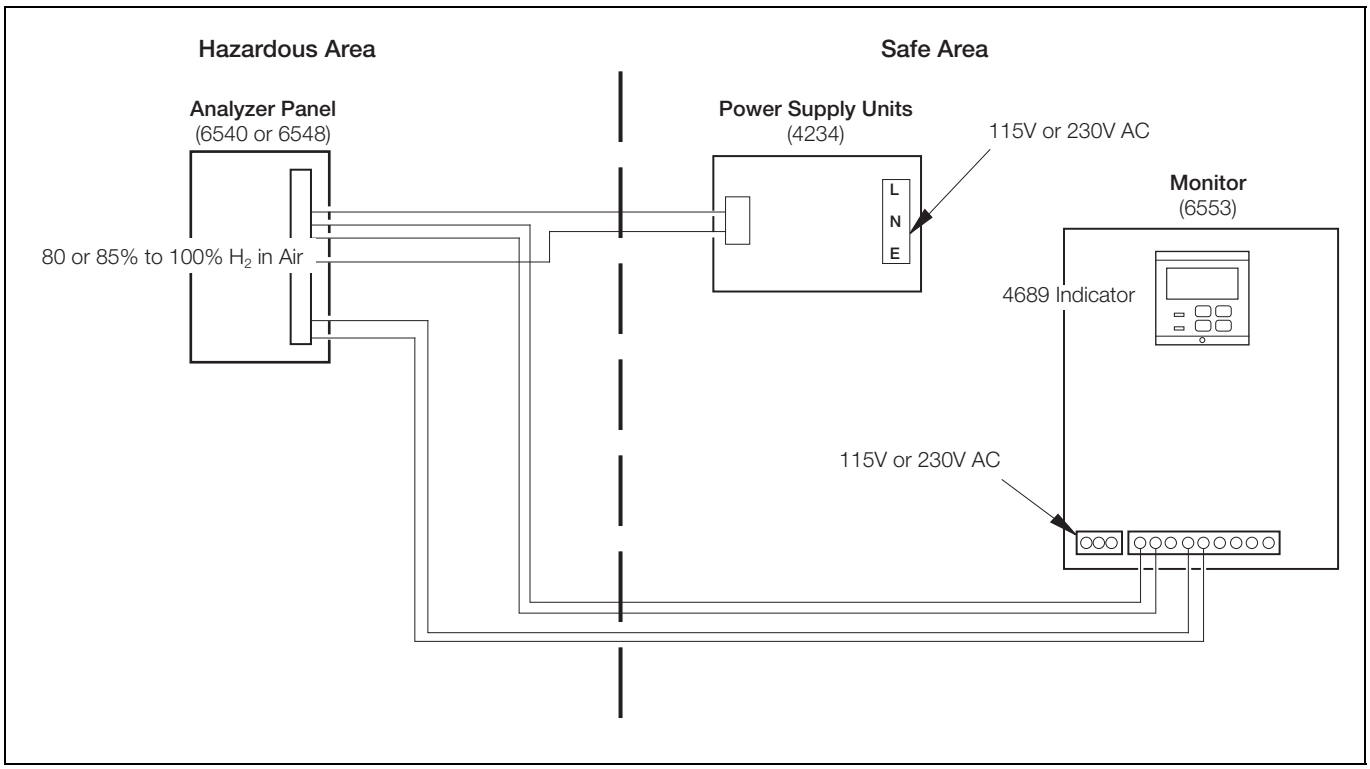

AK104 Hydrogen Purity Analyzer

* Carbon dioxide standard; argon or nitrogen also available

Low and High Pressure Systems

The schematic diagrams below show typical arrangements, identifying the types of low or high pressure gas analyzer panels.

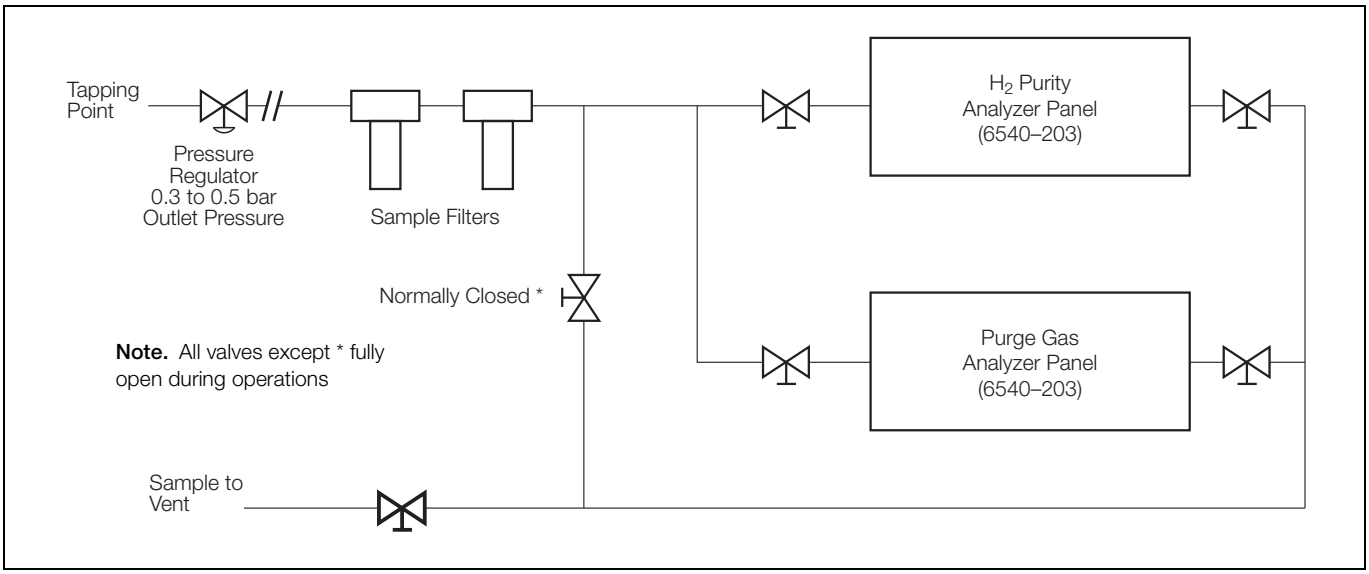

Low Pressure System – Sample Vented

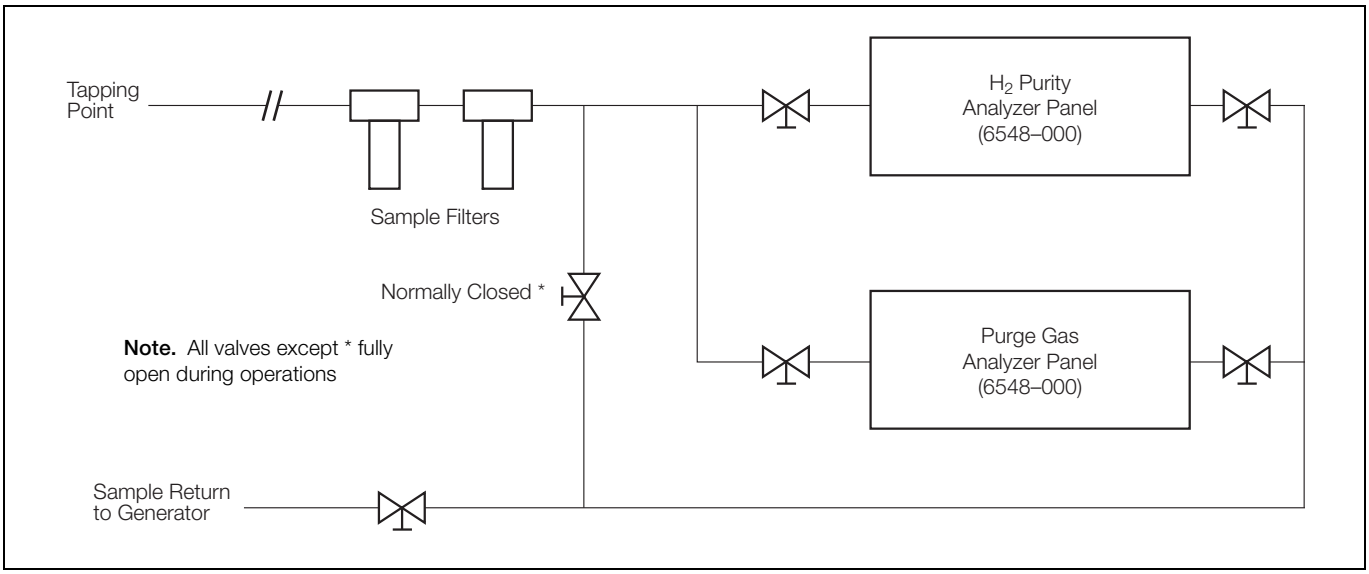

High Pressure System – Sample Non-vented

Specification

6553 Gas Monitor

Approvals

CENELEC approved

EEx ia IIC T_{amb} –20°C to +40°C

BASEEFA Certificate No. BAS 01 ATEX 7043

Ⓔx II (1)G

Ranges

(a) 80% or 85% to 100% H_2 in air

(b) 0 to 100% H_2 in Purge Gas *

(c) 0 to 100% air in Purge Gas *

Range Selector Switch Positions (when fitted)

1 – percentage by volume, hydrogen in air

2 – percentage by volume, hydrogen in purge gas *

3 – percentage by volume, air in purge gas *

Accuracy (display units)

± 0.25% of scale span

Ambient Temperature Range

0 to 45°C (32 to 113°F)

Power Supply

110/120V AC or 200/220/240V AC, 50/60Hz
(two separate versions)

Power Consumption

30VA approximately

Outline Dimensions

290 x 362 x 272mm (11.4 x 14.25 x 10.9 in.)

Weight

12kg (26.4lb)

Environment

Sheltered interior, 0 to 90% RH

*** Note.** Purge gas options include:

CO_2	(Carbon dioxide)
N_2	(Nitrogen)
Ar	(Argon)

Outputs and Set Points

No. of relays

AK101 – Three (Two for H_2 Purity, One for Purge Gas)

AK102 – Four (H_2 Purity)

AK103 – Two (H_2 Purity)

AK104 – Two (H_2 Purity)

Relay contacts

Single pole changeover

Rating	250V AC	250V DC max.
	3A AC	3A DC max.
Loading (non-inductive)	750VA	30W max.
(inductive)	75VA	3W max.

Insulation

2kV RMS contacts to earth (ground)

Remote range indication

Rating	250V AC	300V AC max.
	150mA AC	150mA AC max.

No. of set points

AK101 – Three (Two for H_2 Purity, One for Purge Gas)

AK102 – Four (H_2 Purity)

AK103 – Two (H_2 Purity)

AK104 – Two (H_2 Purity)

Set point adjustment

Programmable

Set point hysteresis

±1% fixed

Local set point annunciation

Red LED

Retransmission

No. of retransmission signals

AK101 – Two fully isolated (One for H_2 Purity, One for Purge Gas)

AK102 – Two fully isolated

AK103 – One fully isolated

AK104 – One fully isolated (H_2 Purity)

Output current

0 to 10mA, 0 to 20mA or 4 to 20mA programmable

Accuracy

±0.25% FSD ±0.5% reading

Resolution

0.1% at 10mA, 0.05% at 20mA

Max. load resistance

750Ω (20mA max.)

4234 Power Supply Unit

Approvals

CENELEC approved

[EEx ia] IIC T_{amb} –20°C to +55°C

BASEEFA Certificate No. BAS 01 ATEX 7041

Ⓔx II (1)G

Input Voltage

115V AC 50/60Hz (4234501) or

230V AC 50/60Hz (4234500)

Fuse Rating

250mA HRC ceramic

DC Output

350mA stabilized ±0.14%

Load Conditions

1 Katharometer	13Ω max.
Interconnecting cable	2Ω max.

Ambient Temperature Range

–20 to 55°C (–4 to 131°F)

Supply Variations

±15V (115V supply) or ±30V (230V supply) 46 to 64Hz

Regulation

Within ± 0.5% for:

- Load variation of ± 15%
- Supply variation of ± 15%
- Ambient temperature variation of ± 20°C (36°F)
- ±4Hz frequency variation

Ripple

Less than 0.5% of set output peak/peak across a 10Ω load

Stability

Within ± 0.7% of initial setting, over period of 1 month with load resistance, supply voltage and ambient temperature at nominal stated values

Overall Dimensions

160 x 170 x 110mm (6.3 x 6.7 x 4.3 in.)

Weight

2.12kg (4.8 lb) approx.

Environment

Sheltered interior

6540–203 and 6548–000 Katharometer Analyzer Panel

Approvals

CENELEC approved

EEx ia IIC T_{amb} –20°C to +55°C

BASEEFA Certificate No. BAS 01 ATEX 1042

Ⓔx II (1)G

Model 6540–203 incorporating Model 6539–960 (H_2) or Model 6539–960 (Purge Gas) Katharometer Unit

Model 6548–000 incorporating Model 6548–001 (H_2 and Purge Gas) Katharometer Unit

Power Supply

350mA DC, from 4234500 or 4234501 power supply unit

Signal Output

0 to 10mV for each range (Air in N_2 1.0mV)

Accuracy

± 2% of scale span, each range
± 5% of scale span, Air in N_2

Dead Time

Typically 5s

Response Time

Typically 40s for 90% step change at Katharometer
Tubing and drying chamber introduce extra delays

Ambient Temperature

55°C (131°F) max.

Sample Connections

Compression couplings:

- 6mm OD tube (Model 6548-000)
- 8mm OD tube (Model 6540-203)

Sample Pressure

Minimum 125mm H_2O

Maximum 0.35bar (Gauge)	Model 6540–203
Maximum 10bar (Gauge)	Model 6548–000

Normal Sample Flowrate

100 to 150ml/min.

Maximum Gas Flowrate

250ml/min

Minimum Gas Flowrate

50ml/min

Outline Dimensions

610 x 305 x 152mm (24 x 12 x 6 in.)

Weight

8.6kg (18.9lb)

Environment

Sheltered interior

Overall Dimensions [Dimensions in mm (in.)]

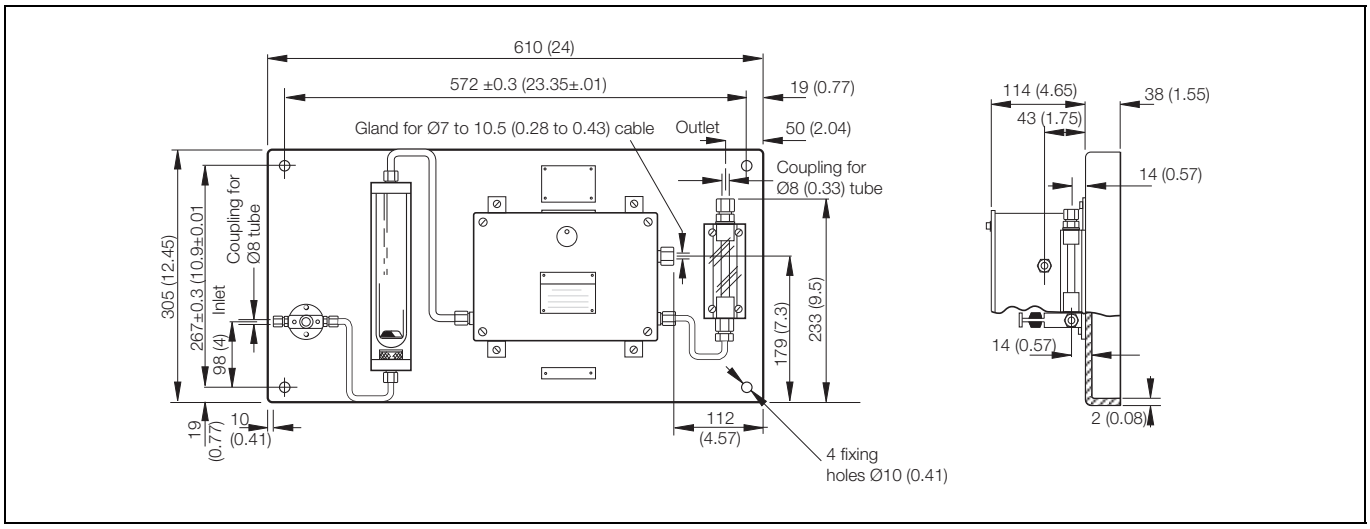

Katharometer Analyzer Panel Assembly (Model 6540–203)

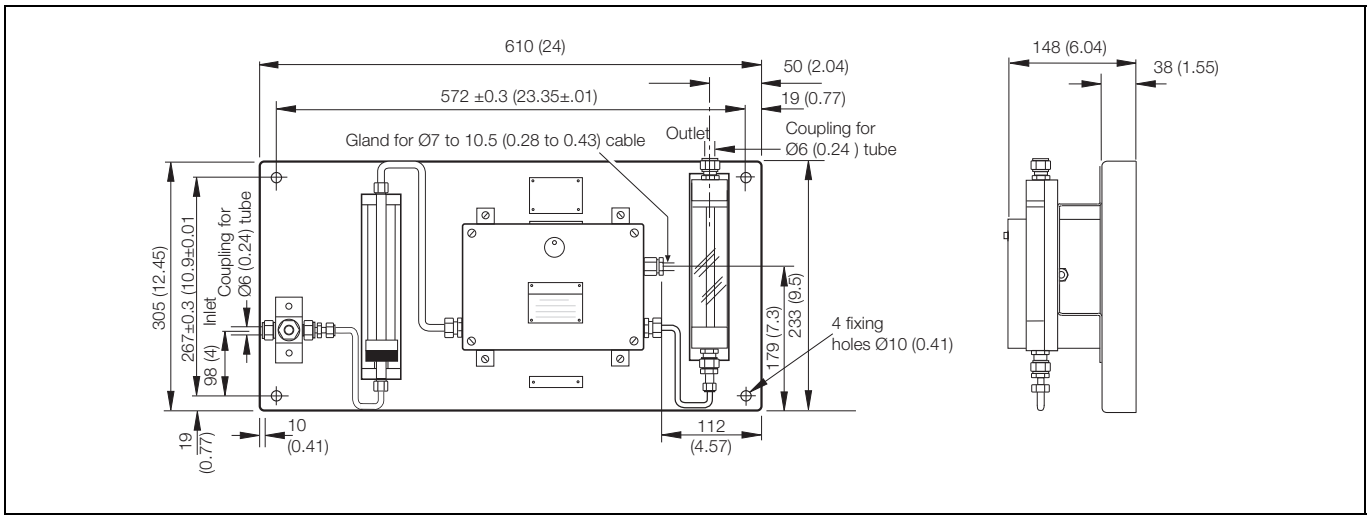

Katharometer Analyzer Panel Assembly (Model 6548–000)

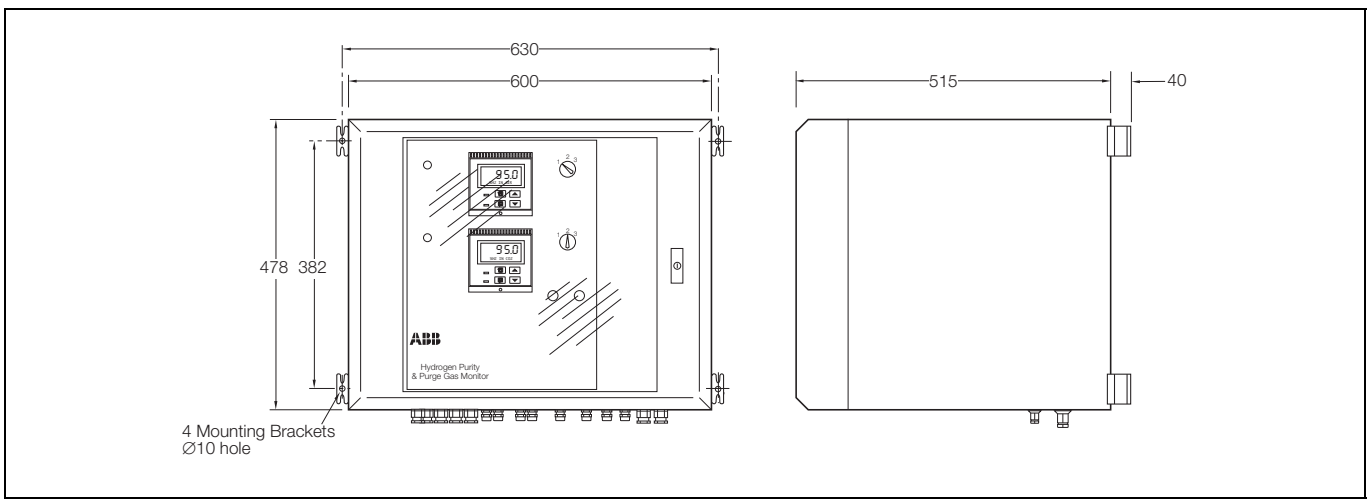

Display Monitor Cubicle

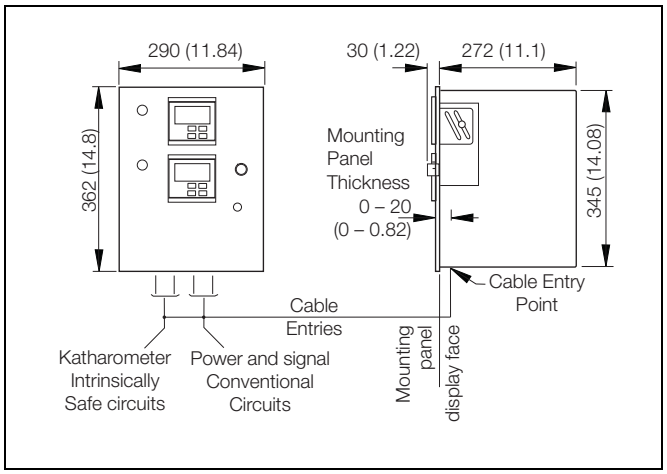

Model 6553 Monitor

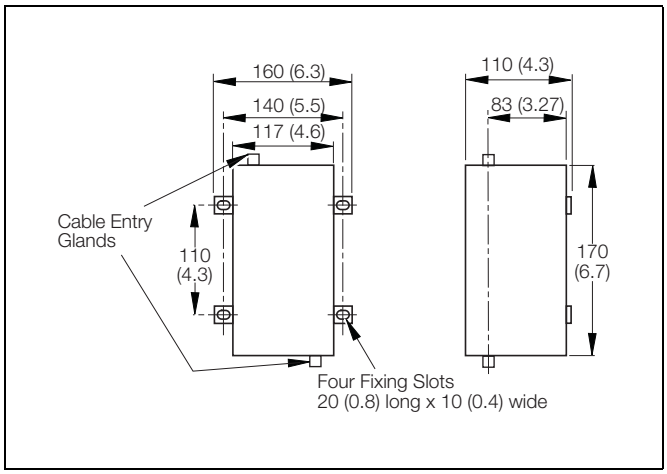

Intrinsically Safe Power Supply Unit (Model 4234500 or 4234501)

Ordering Information

ATEX Compliant Gas Analyzer for Hydrogen-cooled Alternators	AK10	X /	X	X	X	X	X	X	X	
Display Monitor Unit										
Separate H_2 Purity & Purge Gas Displays		1								
Dual 3-range Displays (H_2 Purity and 2 x Purge Gas)		2								
Single 3-range (H_2 Purity and 2 x Purge Gas)		3								
Single Hydrogen Purity Display		4								
Hydrogen Purity Range										
80/85% to 100%			1							
100% to 85% (does not conform to ATEX directive)			2							
100% to 80% (does not conform to ATEX directive)			3							
Purge Gas										
None (AK104 only)				0						
CO2				1						
Argon				2						
Nitrogen (AK101 only)				3						
Gas Analysis Panel *										
None					0					
Low pressure (for vent to atmosphere 0.35barg (5 psi) max.					1					
Low pressure & flame traps (for vent to atmosphere 0.35barg (5 psi) max.					2					
High pressure for closed loop 10barg (145 psi) max.					3					
Cubicle										
Without cubicle						0				
With cubicle						1				
With cubicle plus isolator						2				
With cubicle plus isolator plus MCBs and power supply indicators †						3				
Gas Sample Flow Alarm (only available with Cubicle option)										
Not fitted							0			
One flow alarm fitted AK103 and AK104 (single gas analysis panel versions)							1			
Two flow alarm fitted AK101 and AK102 (dual gas analysis panel versions)							2			
Katharometer Power Supply ***										
None								0		
115V 50/60Hz								1		
230V 50/60Hz								2		
Special Feature										
None									0	
Special									9	
System Labels and Instruction Manuals**										
English										1
French										2
German										3
Polish										7

* Two Gas Analysis panels are required for AK101 and AK102
** Check with Factory for availability
*** Two Katharometer Power Supplies are required for AK101 and AK102
† Not normally fitted to AK102 systems that require 100% redundancy

Contact us

ABB Limited
Process Automation
Oldends Lane
Stonehouse
Gloucestershire GL10 3TA
UK
Tel: +44 1453 826 661
Fax: +44 1453 829 671

ABB Inc.
Process Automation
125 E. County Line Road
Warminster
PA 18974
USA
Tel: +1 215 674 6000
Fax: +1 215 674 7183

www.abb.com

Note
We reserve the right to make technical changes or modify the contents of this document without prior notice. With regard to purchase orders, the agreed particulars shall prevail. ABB does not accept any responsibility whatsoever for potential errors or possible lack of information in this document.

We reserve all rights in this document and in the subject matter and illustrations contained therein. Any reproduction, disclosure to third parties or utilization of its contents in whole or in parts – is forbidden without prior written consent of ABB.

Copyright© 2010 ABB
All rights reserved

3KXA834101R1001

DS/AK100–EN Rev. J 12.2010

Power and productivity
for a better world™