Molecular Devices

MultiClamp 700B Microelectrode Amplifier

A COMPUTER-CONTROLLED AMPLIFIER FOR CURRENT-CLAMP AND VOLTAGE-CLAMP APPLICATIONS

- LOW NOISE
- PATCH CLAMPING
- SHARP ELECTRODES
- COMPUTER CONTROL
- DUAL HEADSTAGES

The MultiClamp™ 700B Amplifier from Molecular Devices is a computer-controlled microelectrode current- and voltage-clamp amplifier for electrophysiology and electrochemistry. This versatile amplifier is capable of single-channel and whole-cell voltage patch clamp, high-speed current clamp (sharp electrode or field potentials), ion-selective electrode recording, amperometry/voltammetry and bilayer recordings. The MultiClamp 700B Amplifier is designed to support up to two primary CV-7B headstages and two optional auxiliary (HS-2 or VG-2 type) headstages. Each CV-7B headstage contains a current-to-voltage converter for voltage clamp, and a voltage follower for true current clamp. This allows the user to conveniently switch between low-noise patch-clamp recording and high-speed current-clamp recording. An optional CV-7B/BL headstage is available for bilayer recording.

POWERFUL FEATURES

The MultiClamp 700B Amplifier uses either an external trigger command or user-programmable voltage threshold for rapid, automatic mode-switching between current and voltage clamp. For example, by pre-setting a voltage threshold in current-clamp mode, the amplifier will automatically switch to voltage-clamp mode when the membrane potential reaches the threshold voltage. A user-specified delay can be programmed allowing further customization of recording procedures.

Sudden changes in membrane or pipette parameters may result in undesirable oscillations during whole-cell recordings. To overcome this, the MultiClamp 700B Amplifier detects current or voltage oscillations and automatically disables or intelligently reduces compensation settings to protect the cell from damage.

Slight voltage drift, often due to changing electrode properties, may contaminate an otherwise decent current clamp recording. In order to maintain the membrane potential at a consistent level, the MultiClamp 700B Amplifier automatically injects a compensatory current over a user-defined time course.

The MultiClamp 700B Amplifier enables researchers to perform experiments that were previously not possible using a single amplifier.

True Current-Clamp and Voltage-Clamp Headstage

CV-7B Headstage

The small profile of the CV-7B headstage makes it easy to incorporate into an electrophysiology setup. The dovetail design integrates with a base plate for easy attachment to micromanipulators.

Simplified CV-7B Diagram

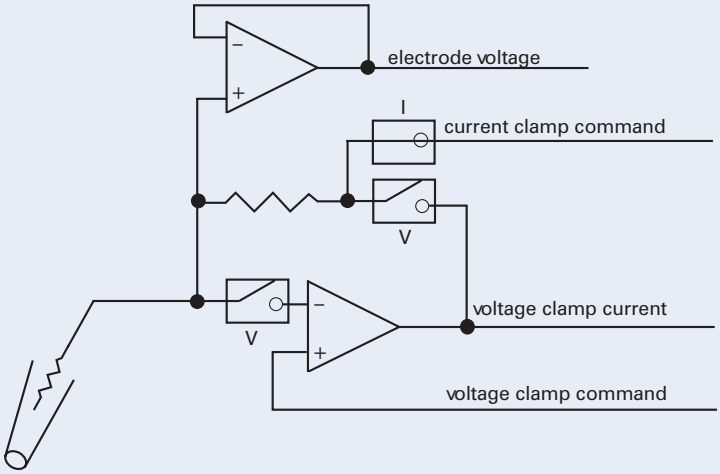

The CV-7B headstage contains both resistor feedback voltage-following circuitry for true current clamp operation, and voltage-to-current circuitry for voltage clamp operation.

TRUE CURRENT-CLAMP AND VOLTAGE-CLAMP HEADSTAGE

Traditionally, amplifiers are designed for optimal performance in voltage clamp or current clamp mode, but cannot perform both during the same experiment. The CV-7B headstages supplied with the MultiClamp 700B Amplifier overcome this limitation by integrating both current-to-voltage and voltage-following circuitry. This design allows users to rapidly switch between patch-clamp recording and high-speed current-clamp recording. The CV-7B headstage has four different feedback resistors in voltage clamp mode, allowing for a wide range of cellular recording. In current clamp mode, the CV-7B headstage provides three different current setting resistors to clamp current from a few pA up to 200 nA.

With two headstages, the MultiClamp 700B Amplifier can perform the function of two patch clamp, two current clamp, or a combination of patch and current clamp amplifiers. In addition, two optional voltage-follower headstages (HS-2 type) can be connected to auxiliary inputs to allow third- and fourth-point voltage recording. Dual headstages allow more complex synaptic experiments to be performed, as well as increasing throughput for drug discovery experiments, all at a significantly lower cost per channel.

Specialized headstages are available for bilayer and electrochemistry recordings. The optional CV-7B/BL headstage was designed to handle the large membrane capacitances found in bilayer recording. The CV-7B/EC headstage was designed to handle the large (±2V) command voltages required during electrochemistry recording.

Computer Control

MultiClamp Commander Software Interface

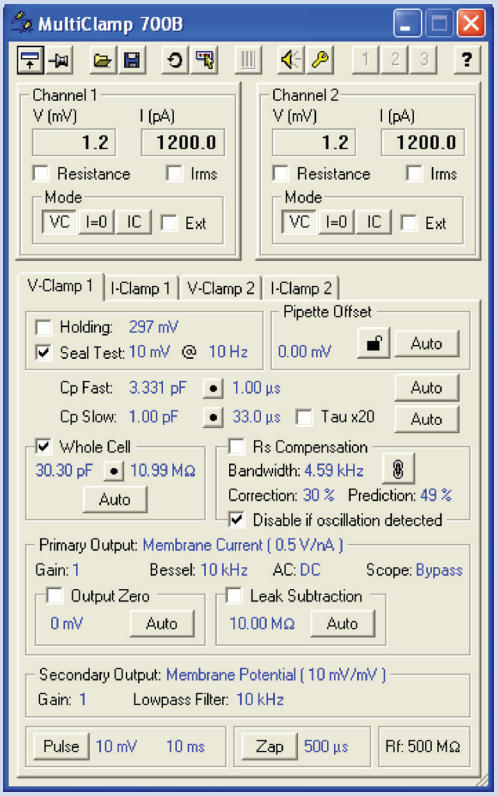

The MultiClamp Commander Software uses mouse-driven "glider" fields that enable continuous parameter adjustments. Values also can be directly entered into edit boxes, or selected from tables, depending on the field. Keyboard shortcuts provide yet another method of entering values and selecting fields within the software. While the MultiClamp Commander Software can be minimized to display only the top panel meters, it can also be set to float on top of other Windows programs.

Conventional Interface with SoftPanel Controller

To offer a more conventional amplifier control, the optional SoftPanel Controller was designed as a hardware extension of the MultiClamp Commander Software.

MULTICLAMP 700B COMMANDER SOFTWARE

The MultiClamp 700B Amplifier is fully controlled by the MultiClamp commander software. Computer control allows for tremendous flexibility, including broad ranges of current passing and recording levels, extensive filtering options, and multiple signal outputs. Computer control simplifies the patching process by providing automation of pipette offset, fast/slow electrode capacitance compensation, whole-cell capacitance compensation, series resistance correction, pipette capacitance neutralization, and bridge balance—all without moving parts.

SOFTPANEL CONTROL

For users who prefer the more conventional feel of knobs, dials and buttons, the optional SoftPanel™ Controller is available. The SoftPanel controller physically replicates all essential amplifier functions by acting as a hardware extension of the MultiClamp Commander Software. It provides a useful secondary method of control in low-light imaging conditions, in areas with restricted space, or where computer monitor high-frequency noise is an issue.

THIRD-PARTY PROGRAMMING

A Software Development Kit (SDK) is included to allow full integration of the MultiClamp Commander Software into third-party applications.

Voltage- and Current-Clamp Functions

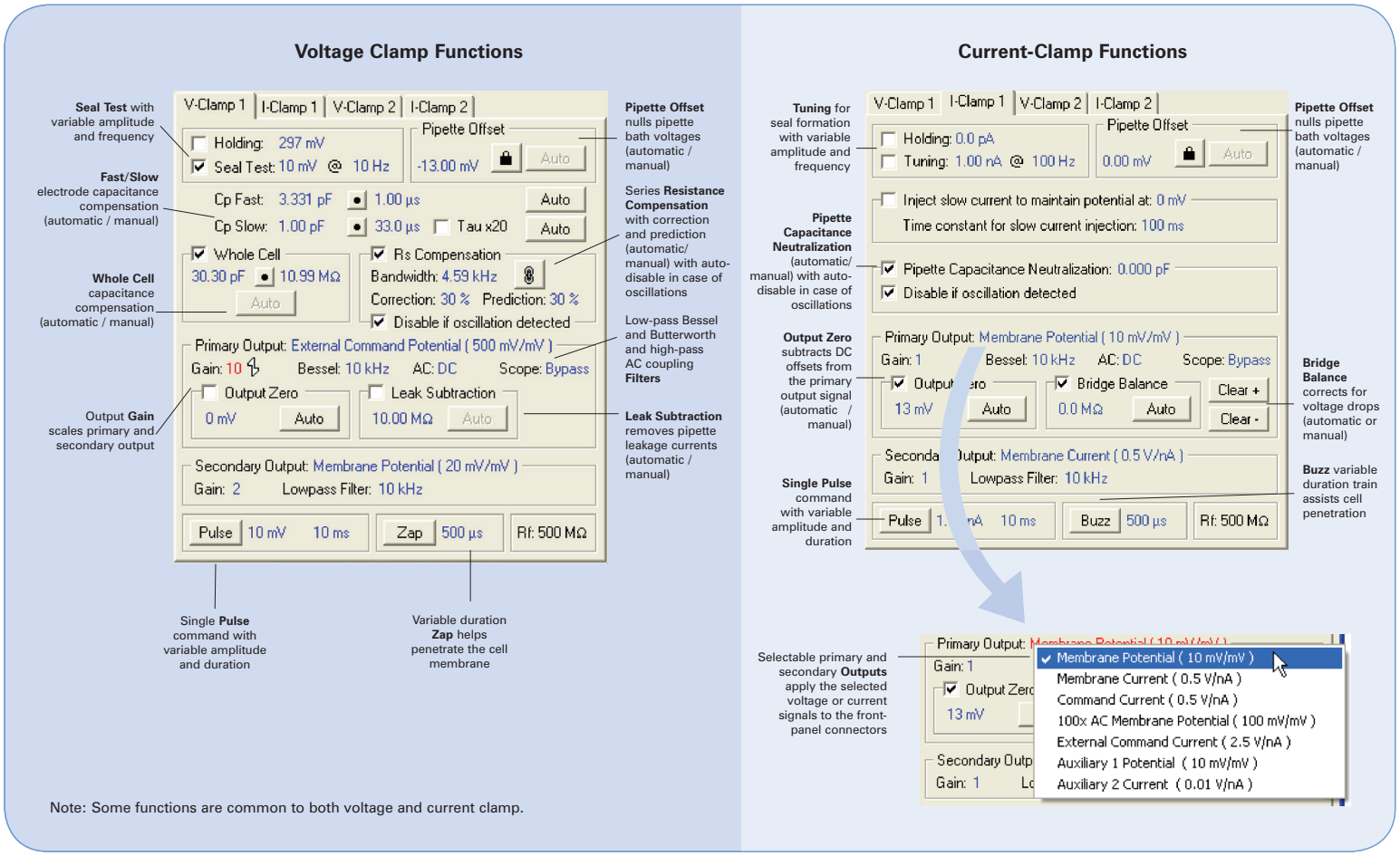

Note: Some functions are common to both voltage and current clamp.

SOFTWARE USER INTERFACE FEATURES

Two meters display output voltage (or resistance) and current (or I_{rms}) for each channel. An Options menu allows easy set up of filters, headstage feedback resistors, audio signals, mode switching and advanced capacitance compensation parameters. Computer control allow the amplifier configuration to be saved and easily re-opened. The last state of the amplifier is independently maintained during a power-off condition. The MultiClamp Commander Software interface is not dependent upon any particular data acquisition software, and therefore can be used with most data acquisition systems in stand-alone mode.

SMART TELEGRAPHS

As the amplifier interface, the MultiClamp Commander Software provides vital information to the data acquisition program about the state of the amplifier. In addition to the values that are typically telegraphed by hardware connections on conventional amplifiers (cell capacitance, filter cutoff frequency, and output gain), the MultiClamp commander software provides five additional signal settings: command sensitivity, operating mode (voltage/current clamp), scaled output signal, scale factors and scaling units of the output signal. These additional settings allow the data acquisition software, such as pCLAMP® 10 Software, to automatically configure stimulus and recording signals based on the commander software settings.

COMPREHENSIVE MICROELECTRODE AMPLIFIER SOLUTION

The MultiClamp 700B Microelectrode Amplifier offers high-quality voltage and current clamp capability with fast mode switching and oscillation suppression, all under convenient computer control. Together with its extensive set of signal conditioning features, the MultiClamp 700B Amplifier is the choice for a large variety of experimental needs. Whether you perform whole-cell, excised or cell-attached patch clamp recordings, sharp-electrode, field potential or ion-selective measurements, bilayer recordings with voltammetry or amperomety, the MultiClamp 700B Amplifier is a comprehensive solution for your microelectrode amplifier applications.

Specifications

CV-7B Technical Specifications
Voltage Clamp

Gain: Feedback resistor (R_f) = 50 GΩ, 5 GΩ, 500 MΩ, 50 MΩ

Noise (for given load, in pA_{rms}):

	10 kHz (8-pole Bessel filter)
50 GΩ	0.28
5 GΩ	0.9
500 MΩ	1.4
50 MΩ	3.0

Fast capacitance compensation magnitude:
Up to 12 pF for 50 GΩ range
Up to 36 pF on all other ranges

Fast capacitance compensation tau: 0.5 µs to 1.8 µs

Slow capacitance compensation magnitude:
0–1 pF for 50 GΩ range
0–3 pF on all other ranges

Slow capacitance compensation, tau ranges:
10–200 µs and 200–4000 µs

Whole cell capacitance compensation:
500 MΩ range: C_m from 1–278.4 pF; R_s from 0.4–744.7 MΩ
50 MΩ range: C_m from 11.06–3080 pF; R_s from 0.036–67.31 MΩ

Series Resistance compensation:
Bandwidth is adjustable from 0.32 to 16 kHz

Series resistances correction (0–100%):
0.4 to 744.7 MΩ on 500 MΩ range
0.036 to 67.31 MΩ on 50 MΩ range

Current Clamp

Gain: R_f = 5 GΩ, 500 MΩ, 50 MΩ

Compliance: ±3 V

Rise time: < 10 µs for load of 10 MΩ on 50 MΩ range (filter bypassed)
< 30 µs for load of 100 MΩ on 500 MΩ range
< 150 µs for load of 1 GΩ on 5 GΩ range

Pipette capacitance neutralization: -8–16 pF

Test Signals
Voltage Clamp

Seal test amplitudes: 0 to ±1 V at electrode

Pulse amplitudes: 0 to ±1 V at electrode

Seal test frequency: Selectable from 2–1000 Hz

Pulse duration: Selectable from 0.1–500 ms

Zap: Fixed at +1 V with selectable 0.025–50 ms duration

Current Clamp

Tuning amplitude: 0 to ±10 V/R_f A at electrode (see DC range)

Tuning frequency: Selectable from 2–1000 Hz

Pulse amplitude: 0 to ±10 V/R_f A at electrode (see DC range)

Pulse duration: Selectable from 0.1–500 ms

Buzz amplitude: Fixed at 15 V_{p-p} signal to the headstage capacitor, with selectable 0.05–500 ms duration

Clear (±) amplitude: Fixed at ±15 V signal to the headstage capacitor

DC Holding Commands
Voltage Clamp

Holding: ±1000 mV

Pipette offset: ±100 mV

Current Clamp

Range: ±200 nA (50 MΩ R_f)
±20 nA (500 MΩ R_f)
±2 nA (5 GΩ R_f)

Pipette offset: ± 200 pA

Output Gain and Filters
Scaled Output Filters

Lowpass: Four-pole Bessel or Butterworth

Bessel cutoff (-3 dB): 2–30 kHz, Bypass

Butterworth cutoff: 3–45 kHz, Bypass

Highpass: Single-pole Bessel

Highpass cutoff: (-3 dB) 0.1–300 Hz, DC

Scope Filter

Lowpass: Two-pole Bessel

Lowpass cutoff: 1 kHz, 3 kHz, 10 kHz, Bypass (-3 dB)

Output Gain

Post-filter gain: 1, 2, 5, 10, 20, 50, 100, 200, 500, 1000, 2000

Audio Monitor
Current or voltage (x 1 or x 100) from either Channel 1 or Channel 2 is available for direct monitoring or via a voltage-to-frequency converter (VCO)

VCO range: 4 kHz at +100 mV to 0.3 kHz at -100 mV

Audio output: Jacks drive a 50 Ω headphone directly, or a powered external speaker

Audio input: Jacks allow mixing of amplifier output with other signals, such as a PC sound card output

General Specifications

Dimensions (in.): 3.5 (H) x 19 (W) x 12 (D)

Dimensions (cm): 8.9 H) x 48.3 (W) x 30.5 (D)

Weight (lbs.): 10 (4.54 kg)

Headstage (in.): 0.875 (H) x 1.625(W) x 2.3125 (D)

Headstage (cm): 2.0 (H) x 4.0 (W) x 8.4 (D)

Channels: 2 (sharing a common ground)

Communications: USB 1 Type B female ports

Rack use: Standard 19" rack-mount (2U) with handles

Benchtop use: Bayonet feet

Power: 85–260 VAC 50–60 Hz, 30 watts (max.)

Safety: CE marking (Conformité Européan)

Computer: 1 GHz or better processor, Windows XP Pro / 2000 / 98 SE or Mac OS X 10.4.6 (Tiger), CD-ROM drive 512 MB RAM, 500 MB HD space, 2 USB 1 ports

Software: MultiClamp™ commander software (included)

ORDERING INFORMATION

MultiClamp 700B microelectrode amplifier
Part Number: MULTICLAMP 700B

- MultiClamp 700B Amplifier with power cord
- (2) CV-7B headstages (with mounting plates)
- (2) Patch-1U model cells
- (1) MultiClamp commander software CD
- (1) USB cable
- Theory and operation user guide (printed)

OPTIONAL ACCESSORIES

SoftPanel™ controller
Part Number: 1-SOFTPANEL

Headstages
Part Number: 1-CV-7B/BL (for bilayers)
Part Number: 1-CV-7B/EC (for electrochemistry)

Auxiliary headstages
HS-2 series (for voltage recording)
VG-2 series (for virtual ground or bath clamp)

Bilayer model cell
Part Number: 1-MCB-1U

SALES OFFICES

United States & Canada
Molecular Devices
Tel. +1-800-635-5577
Fax +1-408-747-3601

Brazil
Molecular Devices Brazil
Tel. +55-11-3616-6607
Fax +55-11-3616-6607

China
Molecular Devices Beijing
Tel. +86-10-6410-8669
Fax +86-10-6410-8601

Molecular Devices Shanghai
Tel. +86-21-6887-8820
Fax +86-21-6887-8890

Germany
Molecular Devices GmbH
Tel. +49-89/96-05-88-0
Fax +49-89/9-62-02-34-5

Japan
Molecular Devices Japan, Osaka
Tel. +81-6-6399-8211
Fax +81-6-6399-8212

Molecular Devices Japan, Tokyo
Tel. +81-3-5282-5261
Fax +81-3-5282-5262

South Korea
Molecular Devices Korea, LLC
Tel. +82-2-3471-9531
Fax +82-2-3471-9532

United Kingdom
Molecular Devices (GB) Ltd.
Tel. +44-118-944-8000
Fax +44-118-944-8001

www.moleculardevices.com

Printed in U.S.A. 6/10 #0120-1421B