Hoefer SE 400/SE 410

the Sturdier vertical slab gel electrophoresis units

um SE400-IM/Rev. A0/06-04

Hoefer

Page finder

1. Gel electrophoresis unit function and description

Unpacking and disassembly 2
Annotated inventory 4
Specifications 6

2. Operating instructions

2.1. Gel casting preparation
2.1.1. options—precast and self cast gels 7
2.1.2. preliminary casting steps 8
2.2. Acrylamide gel preparation
2.2.1. resolving gel 11
2.2.2. stacking gel 12
2.2.3. gradient gel 13
2.3. Sample preparation 15
2.4. Final assembly 16
2.5. Resolving the sample 20
2.6. After electrophoresis 23

3. Care and maintenance 24

4. Troubleshooting 25

Appendices

A. Laemmli System Gels 29
B. Bibliography 37

Ordering information 39

Safety warnings and precautions

English

- Only use a power supply that is CE marked or safety certified by a nationally recognized testing laboratory.
- Turn all power supply controls off before plugging in or removing the power leads, and only connect or disconnect leads when the safety lid is in place.
- Do not operate at temperatures above 45 °C. All plastic parts are rated for 45 °C continuous duty. Overheating will cause irreparable damage to the unit!
- If this equipment is used in a manner not specified by the manufacturer, the protection provided by the equipment may be impaired.
- Only accessories and parts approved or supplied by Hoefer, Inc. may be used for operating, maintaining, and servicing this product.

Français

- Utiliser seulement un générateur marqué CE ou dont la sûreté a été certifiée par un laboratoire de test nationalement reconnu.
- Eteindre le générateur avant de brancher ou de débrancher les prises. Le couvercle de sécurité doit être en place avant de brancher ou de débrancher les prises au générateur.
- Ne pas utiliser à une température au dessus de 45 °C. Toutes les pièces en plastique sont prévues pour résister à une température constante de 45 °C. Toute surchauffe causera des dommages irréparables à l'unité.
- Si cet appareil est utilisé de manière incorrecte ou non approuvée par le constructeur, la protection fournie par l'appareil peut etre altérée.
- Seuls les accessoires et pièces détachées approuvés ou fournis par Hoefer, Inc. sont recommandés pour l'utilisation, l'entretien et la réparation de ce produit.

1. Unit function and description

The Hoefer™ SE 400 and SE 410 Sturdier™ Vertical Slab Gel Electrophoresis Units are intended for electrophoretic separation of proteins and nucleic acids under both denaturing and native conditions. Up to 28 samples can be compared on a single slab gel. One gel (or two gels if using the divider plate, ordered separately) is cast in the casting stand side of the unit. The size of the gel is 14 × 15 cm if using the SE 400, and 14 × 23 cm if using the SE 410. After casting, the sandwich is transferred into the lower buffer chamber for electrophoresis.

The basic unit includes one set of glass plates (18 × 16 cm for the SE 400, and 18 × 24 cm for the SE 410), two clamp assemblies (SE 400: two 16 cm clamps; SE 410: two 16 cm clamps and two 8 cm clamps), and two cams. The complete unit includes one 15-well comb and two spacers, 1.5 mm thick, in addition to the basic unit.

Unpacking and disassembly

Unwrap all packages carefully and compare contents with the packing list, making sure all items arrived. If any part is missing, contact your local sales office. Inspect all components for damage that may have occurred while the unit was in transit. If any part appears damaged, contact the carrier immediately. Be sure to keep all packing material for damage claims or to use should it become necessary to return the unit.

This unit is partially assembled to protect components during shipping. To disassemble:

❶

Position the unit so that the electrical connectors face you.

❷

Note the holes at each side on the upper buffer chamber. Rest your thumbs in these holes and use your index fingers to lift the sides of the safety lid gently until the electrode connectors unplug. First lift the lid straight up so that the upper electrode shield clears the upper chamber and then lift the lid out (toward you) to remove it completely.

❸

Lift out the upper buffer chamber and then the glass plate assembly.

❹

Remove the clamps by loosening the thumb screws.

Fig 1. SE 400 series main components.

Included but not shown:

Cams
GelSeal grease, 1/4 oz.
Spacer-Mate
Wonder Wedge
Level

Required but not included:

Approved power supply

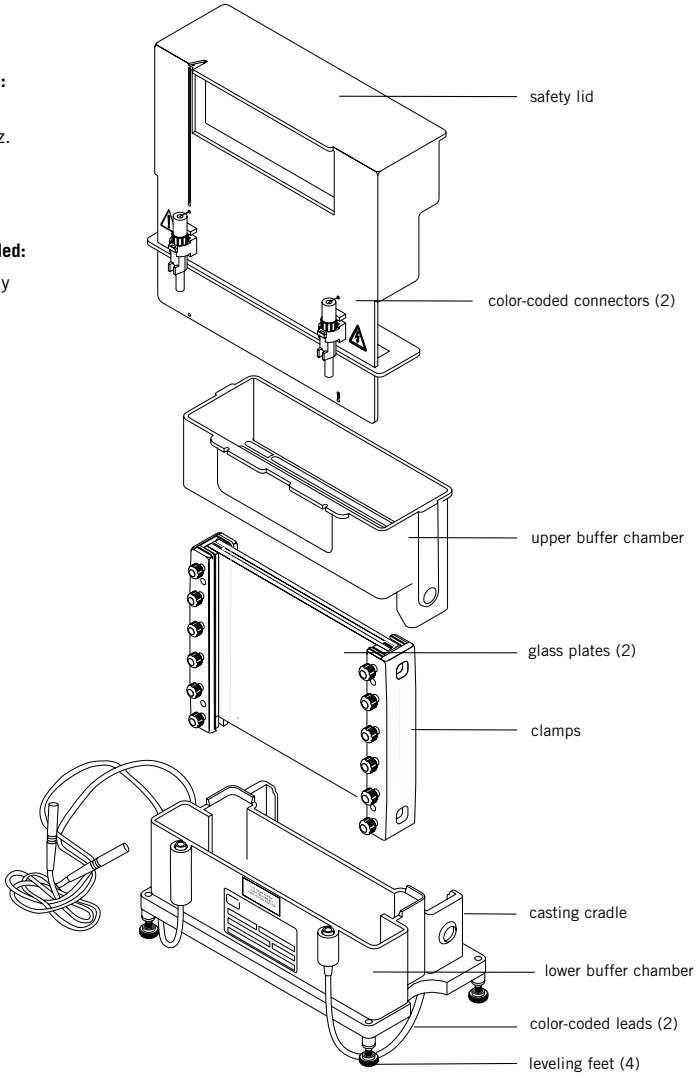

Annotated inventory

Buffer chambers. Both buffer chambers are chemically resistant to common electrophoretic buffers but not to organic solvents or strong acids and alkalis.

Safety lid. The lid contains both electrodes and both electrode connectors. The electrode connectors plug into the lead connectors on the lower buffer chamber. The color-coded leads plug into color-coded jacks on the power supply.

Glass plates. Two 18-cm wide glass plates are included. Plates for the SE 400 are 16 cm long, and plates for the SE 410 are 24 cm long. (A notched divider plate, ordered separately, can be used to run two gels at the same time.)

Clamps. Two 16-cm clamps are required to secure the 16 cm long sandwich. These and an additional pair of 8-cm clamps are required to secure a 24-cm long sandwich.

Casting stand. The caster can be leveled with the adjustable leveling feet on the bottom of the unit. A laminated gasket seals the bottom of the glass plate assembly when it is locked into the stand.

Cams. Cams are used twice; first to secure the assembled sandwich in the casting stand and again to lock the sandwich and the upper buffer chamber together.

Rubber gaskets. There are two gaskets. The laminated gasket fits into the bottom of the cast-

ing stand and provides the seal for the bottom of the gel sandwich. The slotted gasket fits under the upper chamber and provides the seal between the sandwich and the upper chamber. Two ridges help position this gasket.

Spacer-Mate assembly template. Aligns spacers for sandwich assembly.

Wonder Wedge Plate Separator Tool. Use to disassemble gel sandwiches and to gauge spacer and comb thickness.

Spacers. (May be ordered separately.) Spacers determine the thickness of the gel. They are 2 cm wide and are available in three thicknesses: 0.75, 1.0, and 1.5 mm.

Combs. (May be ordered separately.) Teflon™ combs that form 1 to 28 wells are available in three thicknesses: 0.75, 1.0, and 1.5 mm. Blank combs form a single large well, and preparative combs include 1 or 2 reference wells in addition to the preparative well.

All blanks, preparative combs, and combs with fewer than 28 wells form wells that are 25 mm deep. The 28-well comb forms wells that are only 15 mm deep so that wells do not collapse when the comb is removed. The sample volume held by each well depends on the gel thickness, well depth and the number of wells per comb. Table 2 on page 15 lists volume per 1 mm depth for wells created by each comb size. See the ordering information for additional comb specifications.

This declaration of conformity is only valid for the instrument when it is:

- used in laboratory locations,
- used as delivered from Hoefer, Inc. except for alterations described in the User Manual, and
- connected to other CE labeled instruments or products recommended or approved by Hoefer, Inc

Specifications

Glass plate size	SE 400: 18 × 16 cm SE 410: 18 × 24 cm
Approximate gel size	SE 400: 14 × 15 cm SE 410: 14 × 23 cm
Max. wattage	20 W
Max. voltage	500 V @ 40 mA
Max. amperage	30 mA/gel (60 mA total @ 325 V)
Max. temperature	45 °C
Environmental operating conditions	Indoor use: 4–40 °C Humidity up to 80% Altitude up to 2000 m Installation category: II Pollution degree: II
Dimensions (w × h × d)	SE 400: 24 × 28 × 15 cm (9.5 × 11 × 6 in.) SE 410: 24 × 36 × 15 cm (9.5 × 14.2 × 6 in.)
Product certifications	EN61010–1, UL3101–1, CSA, C22.2 1010.1, CE

2. Operating instructions

Procedures for casting gels and electrophoretic separation follow. Included are instructions for both single percentage (homogeneous) and gradient polyacrylamide gels. Appendix A lists recipes and Appendix B gives a bibliography.

2.1. Gel casting preparation

2.1.1. options—precast gels and self-cast gels

The SE 400 unit accepts standard precast gels purchased from commercial suppliers as well as self-cast gels, which can be prepared using the built-in casting stand. (To cast multiple 14 × 16 cm gels, the Multiple Gel Caster Kit, which holds up to 10 sandwiches, and the Gel Caster Kit, which holds up to four sandwiches, can be ordered separately.) Gels for the SE 410 must be self-cast.

Glass plates, spacers, and clamp sets are sized so that the assembled sandwich can be easily aligned to create the required seal. When assembling sandwiches, *take extra care to align all components for best results*.

2.1.2. preliminary casting steps

❶

Prepare the caster

Place the spirit level into the lower buffer chamber and adjust the leveling feet.

❷

Prepare the clamps

Loosen all clamp screws and make space for the sandwich by sliding the pressure plates toward the screws.

❸

Construct each gel sandwich

For each sandwich, choose two perfectly clean unchipped glass plates and two spacers. Lay one plate on a flat surface, lay the Spacer-Mate assembly template onto the plate (wide side at the top), place a spacer along each edge, and lay the second glass plate on top.

❹

Secure the sandwich with clamps

Slide one clamp at a time along the sandwich sides. Finger tighten one screw on each clamp, set the sandwich upright on a flat surface, and loosen the screw to align the stack. Take great care in aligning to ensure a seal. Finger tighten all screws. Remove the Spacer-Mate.

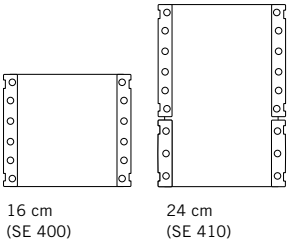

Fig 2. A 24-cm sandwich requires two 16-cm and two 8-cm clamps.

24-cm sandwich (SE 410)

A 24-cm sandwich requires two clamp assemblies on each side. Align each end separately. That is, align one end, finger-tighten the screws, turn the sandwich 180° and align the other end. In each case allow the clamp to slide down and align perfectly with the top (or bottom) edge of the glass plates.

For 24 cm long plates, position the 8 cm clamp at the bottom (see Fig 2).

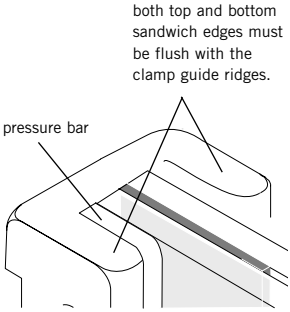

Fig 3. Sandwich assembly: Inspect glass plates for nicks. Use only unchipped plates to prevent leaking.

Tip: Remove the laminated gasket from the cradle and use the casting cradle to hold the sandwich for alignment.

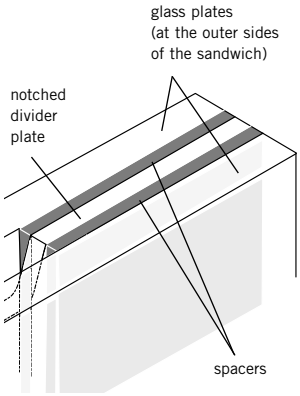

Fig 4. 2-gel sandwich assembly: 2-gel sandwiches are limited to thinner gels; no spacers thicker than 1.5 mm can be used.

2-gel sandwich

A 16- or 24-cm long notched divider plate (ordered separately) doubles the number of gels that can be cast and run (see Fig 4).

Assemble in the same manner as a single gel sandwich, except before placing the top glass plate, lay the divider plate atop the first set of spacers and a second set of spacers atop the divider plate. Place the notch so that it will be at the top of the gels. As with a regular sandwich, it is essential that the spacers and plates align perfectly in order to create a seal.

❺

Inspect the bottom of the sandwich to make sure that edges are aligned flush in order to ensure a complete seal. Adjust if necessary (see Fig 3).

Optional: Apply a light film of GelSeal only on the bottom outside corners if your sandwiches tend to leak. Do not use silicone grease or petroleum jelly to seal the sandwich because these substances are difficult to remove and ultimately may cause artifacts in the gel.

❻

Place the laminated gasket into the casting cradle with the foam side down. Place the glass plate assembly in the casting cradle, screw side facing out (see Fig 5).

24-cm plates: Place the sandwich so that the short clamps are at the bottom.

❼

Insert a cam into the hole on each side of the casting tray with the ridge (short end) pointing up. Seal the gel sandwich by turning both cams as far as needed, usually 90° to 150°, up to 180°. The cam action presses the plates into the gasket to seal the bottom of the sandwich. The seal is complete once the glass edge appears darker and nearly transparent against the gasket. Do not tighten the cam past this point.

Fig 5. Caster components and assembly.

1. Lower the assembled sandwich into the casting cradle.
2. Insert cams into the cam holes, ridge end up.
3. Turn cam up to 180° until the glass plates seal against the gasket.

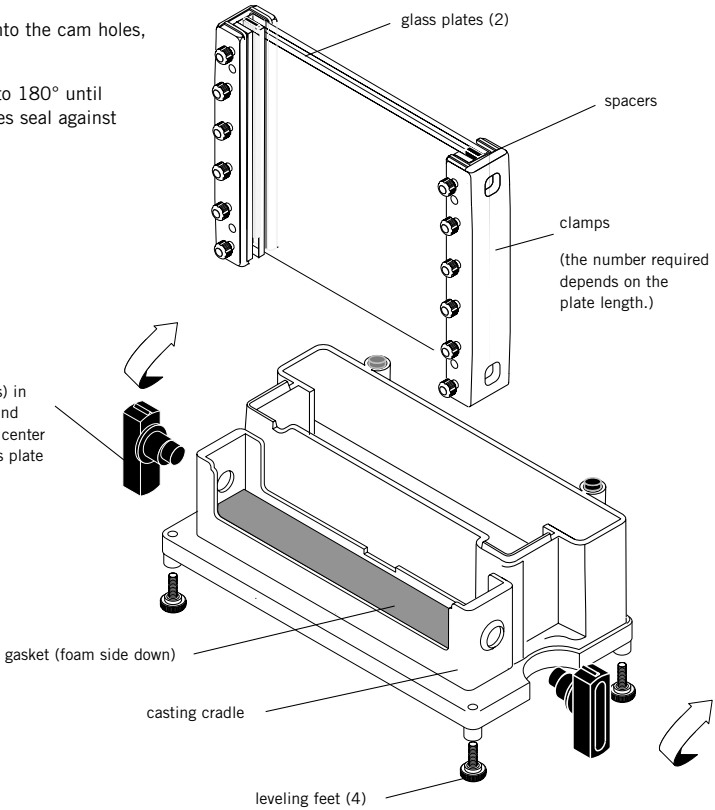

Note: It is easier to keep the caster balanced if you turn both cams toward the center of the caster.

2.2. Acrylamide gel preparation

Table 1. Approximate monomer solution volume required for a single gel

	Gel thickness (mm)		
Model	**0.75**	**1.00**	**1.5**
SE 400	15 ml	23 ml	30 ml
SE 410	23 ml	34 ml	45 ml

2.2.1. resolving gel

❶

Prepare the monomer solution and pour the gel. Prepare the required amount of monomer solution, deaerate, and add the initiator and catalyst just prior to pouring the gel.

❷

Note: Appendix A lists recipes for the Laemmli gel system.

Pipet the solution into one corner of the sandwich, taking care not to introduce any air bubbles. See below for the appropriate solution level:

No stacking gel
(Continuous system.) Fill solution to just below the top of the upper plate edge. If bubbles are trapped, remove with a pipet or syringe. Introduce a comb (at a slight angle) into each sandwich, taking care not to trap air bubbles under the teeth.

2-gel sandwich
Pipet the solution into both sandwiches, filling each to the same level below the notched edge.

Stacking gel
Fill solution to 3–4 cm below the top of the glass plate. This height allows 1 cm of stacking gel below the wells. Pour the gel and apply an overlay (see step 3). After the gel is set, prepare the stacking gel as described in the next section.

2-D electrophoresis
(Discontinuous system) For the second dimension resolving gel, fill solution to ~1.0 cm below the top of the glass plate (leave extra space for a stacking gel, if required). One centimeter allows enough space for the first dimension IPG strip or tube gel and an agarose seal. (While transferring, take care to avoid trapping air between the tube gel and slab gel; seal the tube gel into place with agarose in electrophoresis buffer.)

❸

If combs are in place, skip to step 4.

If no combs are in place, overlay the resolving gel with a thin layer of water-saturated *n*-butanol, water, or diluted gel buffer to prevent exposure of the top surface of the gel solution to atmospheric oxygen. Slowly deliver the overlay solution from a glass syringe fitted with a 22-gauge needle. Apply the solution near the spacer and allow it to flow across the surface unaided.

❹

Allow the gel to polymerize for a minimum of one hour.

2.2.2. stacking gel

Pour the stacking gel before removing the sandwich from the gel caster. Stacking gel resolution is optimal when prepared just before electrophoresis.

❶

Remove the overlay by rinsing the top of the gel several times with distilled water. Invert the caster to drain. To ensure a seamless contact between the resolving and stacking gels, remove residual liquid by blotting one corner with a lint-free tissue.

❷

Calculate the stacking gel monomer solution volume.

❸

Prepare the stacking gel monomer solution, deaerate it, and add catalyst and initiator. Pour the stacking gel onto the resolving gel with a disposable or Pasteur pipet to a level about 2 mm from the top of the glass plate.

❹

Introduce a comb (at a slight angle) into the sandwich, taking care not to trap air under the teeth. Allow a minimum of one hour for the gel to polymerize.

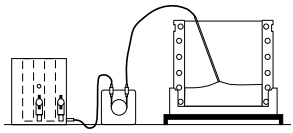

Fig 6. Pouring a gradient gel

2.2.3. gradient gels

Linear gradient gels can be poured in the gel caster. For easy gradient mixing, we recommend using one of the Hoefer SG series gradient makers. Gradient gels are poured from the top of the caster with a cannula if using the provided gel caster or from the bottom if using a Hoefer multiple gel caster (see instructions accompanying the caster). Once the gradient gel polymerizes, a stacking gel is poured.

❶

Assemble the glass plate assembly into the caster as described in section 2.1.2.

❷

Set up the monomer solution flow path. Run a length of clear vinyl tubing through a peristaltic pump. Attach one end of the tubing to the gradient maker outlet port and the other end to a 20 cm cannula. (The outside diameter of the cannula must be less than the spacer thickness.) Place the cannula so that it rests at the bottom of the sandwich, midway between the spacers.

❸

Prepare the monomer solution. Calculate the total volume needed. Prepare one half of this volume of higher and the other half of lower % acrylamide solution. (**Optional:** Add 15% sucrose or 25% glycerol [final concentration] to the higher % solution to improve layering.)

❹

Pour the "light" solution into the reservoir chamber (the chamber furthest from the inlet). Open the stopcock long enough to displace air between the chambers and then close. Pour the "heavy" solution into the mixing chamber and place a stirring bar into this chamber. Place the gradient maker on a magnetic stirrer and begin stirring at a rate that does not introduce bubbles in the solution.

Note: With Coomassie™ Blue, it is possible to detect 1 µg in a single band; with the more sensitive silver stains, it is possible to detect as little as 10 ng.

❺

Mix the gradient. While the solution is stirring, begin pumping (5–10 ml/min) from the mixing chamber and immediately open the stopcock to the reservoir chamber. Raise the cannula as liquid enters the sandwich, keeping the tip at the gel surface.

❻

Overlay each gel with a thin layer of water-saturated *n*-butanol, water, or diluted gel buffer to prevent gel exposure to oxygen. *Slowly* deliver the overlay solution from a glass syringe fitted with a 22-gauge needle. Apply the solution near the spacer and allow it to flow across the surface unaided.

❼

Allow the gel(s) to polymerize for a minimum of one hour. After polymerization, pour off the overlay and rinse the gel surface several times with distilled water.

❽

Prepare the stacking gel monomer solution, pour the stacking gel and introduce a comb (at a slight angle) into the sandwich, taking care not to trap air under the teeth. Allow a minimum of one hour for the gel to polymerize.

2.3. Sample preparation

The amount of sample loaded depends on the thickness of the gel, the sensitivity of the detection method used, and the amount of sample expected in each band. In a continuous buffer system, the protein sample should be relatively concentrated because no stacking gel is used. In a discontinuous buffer system, the zone into which each molecular species migrates is sharpened by the stacking gel, so the sample need not be as concentrated.

Table 2. Well volume (µl) per 1 mm depth for each comb size

	Comb thickness (mm)		
No. of wells	**0.75**	**1.0**	**1.5**
10	6.2	8.3	12.4
12	5.8	—	11.5
15	4.3	5.7	8.6
20	3.1	4.1	6.2
28	2.1	2.7	4.1

❶

Prepare the wells. Remove the comb by gently rocking it side to side and then lifting it straight up to avoid damaging the well walls. Carefully rinse each well with electrophoresis buffer to remove unpolymerized acrylamide and then drain by inverting the gel sandwich (or caster). Fill each well with electrophoresis buffer.

❷

Prepare the sample. Increase liquid sample density with 10% glycerol or sucrose. Add a tracking dye such as phenol red, bromophenol blue, or pyronin Y.

For SDS protein gels, use 2X treatment buffer to denature both liquid and dry samples in a test tube:

To liquid protein samples, add an equal volume of 2X treatment buffer.

To dry protein samples, add equal volumes of 2X treatment buffer and deionized water to achieve the desired concentration.

Heat the tube in boiling water for 90 seconds, then allow to cool to room temperature. Treated samples can be stored at -40 to -80 °C for future runs.

Heat membrane proteins to 60 °C for 20 minutes. Store unused sample at 4 °C.

Note: Before the first use, disassemble the unit and wash with a dilute solution of a laboratory detergent and rinse thoroughly, first with water and then distilled water.

Note: To help hold the gasket against the upper buffer chamber, dab a small amount of GelSeal at each end of the gasket only and then install.

Important! A smooth fit between the sandwich and gasket is essential for a good seal.

2.4. Final assembly

❶

Rinse both buffer chambers with water and distilled water thoroughly before each use.

❷

Install the gel sandwich in the lower buffer chamber

Release the sandwich from the caster by removing both cams. Clean away any gel adhering to the exterior of the gel sandwich. Install the sandwich in the lower buffer chamber, clamp screws facing toward the leads.

❸

Carefully fill each sample well with electrophoresis buffer, then underlay prepared sample into the wells using a fine-tipped microsyringe or gel loading pipet tip.

❹

Attach the upper buffer chamber to the gel sandwich

Invert the upper chamber and press the slotted gasket into the grooves for a precise fit.

Proceed with care so that the samples are not disturbed: Lower the upper chamber onto the gel sandwich. Install the cams, ridge pointing down, into the cam holes as shown on page 17. Simultaneously turn one cam clockwise and the other counterclockwise a *full* 180° to secure the assembly.

Fig 7. Upper buffer chamber assembly: First place the upper chamber onto the sandwich assembly, then insert the cams into the cam holes, ridge (short end) pointing down. To secure the assembly, turn the cams a full 180° so that the ridge points up (not shown).

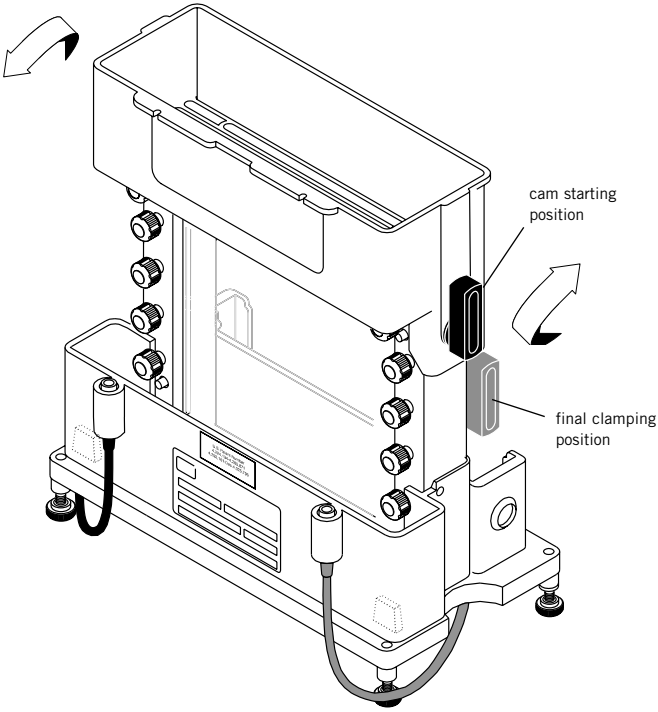

Note: Do not force the cams. If encountering unusual resistance, disassemble the unit and inspect clamp and glass alignment along the top of the sandwich. Align and reinstall the upper chamber.

Note: If the assembly leaks, take the assembly to a sink and partially release the cams to allow buffer to drain.

Remove the upper chamber, check alignment of all sandwich components, and adjust if necessary.

❺

Pour ~100 ml of electrophoresis buffer into the upper chamber, directing the buffer stream against the wall to avoid disturbing the samples. Inspect the installation for leaks. Fill both chambers (the final volume for each chamber is ~350 ml).

❻

Safety lid installation.

Built-in safety features require that all three guides are properly placed (see Fig 8).

❼

Plug the color-coded leads into the jacks of an approved power supply (min. 50 mA, 300 V). Plug the red lead into the red output jack and the black lead into the black output jack. In most systems, the red lead, which is connected to the bottom electrode, is the anode (+), and the black lead, connected to the top electrode, is the cathode (–).

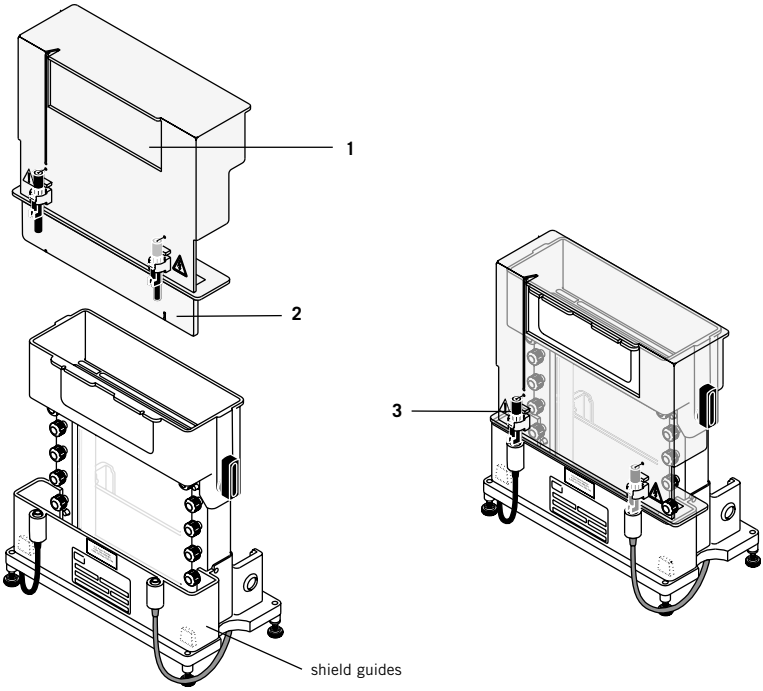

Fig 8. Safety lid installation.

The safety lid seats effortlessly if all three features are properly aligned:

1. The recessed upper electrode shield slides into the upper buffer chamber.
2. The lower electrode shield fits into the lower buffer chamber and rests in front of the shield guides.
3. The electrode connectors align and seat.

If you are unfamiliar with the installation, please note: The upper electrode is protected by a recessed shield, which rests in the upper buffer chamber once the lid is installed. It is easiest to install the lid by first approaching the upper buffer chamber from the front, and then sliding the safety lid down straight down onto the connectors. If the lid does not fit properly, check the position of the lower electrode shield, which must clear the connectors and rest in the lower buffer chamber, in front of the the shield guides. Once all guides are in place, press gently to connect the plugs.

2.5. Resolving the sample

Electrophoresis parameters for discontinuous polyacrylamide gels

Gels may be run at either constant current or constant voltage settings. A constant current setting is traditionally used with a discontinuous buffer system so that the rate of electrophoretic migration remains unchanged throughout the run. Under constant current conditions, the voltage increases as the run proceeds. A lower current setting is recommended for higher resolution. The optimal current level must be determined empirically; the main factors that must be balanced are the gel concentration and migration speed, and the resulting Joule heating and band distortion. Table 3 lists starting point guidelines and adjustments for gel thickness, number of gels, and migration rate.

Note: The cross section (and current requirement) is determined by gel thickness. The running time is determined by the length of the plate.

Table 3. Laemmli buffer system starting point guidelines

Gel thickness*	1.5 mm
Current per gel†	25 mA constant current
Starting voltage	80–90 V

Gel length (cm)	model	final voltage (V)
16	SE 400	200–250
24	SE 410	275–325

*Thicker or thinner gels require proportionally more or less current. For example, a 0.75 mm gel , which is half as thick as a 1.5 mm gel, requires half as much current, or 12.5 mA.

†The current must be multiplied by the number of gels. For instance, if a 1 mm 2-gel sandwich is installed, twice as much current is required than for a single 1 mm gel at the same voltage.

Note: Passive cooling, such as running the unit in a cold room, may be required to reduce the effects of Joule heating.

Current

Current acts on the total cross-sectional area of all the gels, and in terms of a circuit, the gels are considered to run in parallel. Therefore, any current setting for one gel must be multiplied by the number of gels run. For a gel 1.5 mm thick, we suggest a starting point current setting of 25 mA. (Two 1.5 mm gels = 50 mA.)

Voltage

The starting voltage for a 1.5 mm slab gel connected to a power supply set to 25 mA is usually 80–90 V (for the SE 400 model and a Laemmli discontinuous buffer system). The final voltage is typically 200–325 V, depending on the length of the gel. (See Table 3 on page 20.)

Time

Important! After initial monitoring, do not leave the unit unattended for more than 1 hour without checking the progress of the bands and the buffer level.

A run is complete when the tracking dye reaches the bottom of the gel. A 16-cm long, 1.5 mm thick Laemmli SDS gel, run at 25 mA/gel without cooling, usually requires 5 hours. A 24-cm gel requires about 8 hours.

Record each run

Keep a record of the current or voltage setting, number and thickness of gels, buffer system, and the starting and final current or voltage readings for each run so that results can be compared. Inconsistent results for the same system and settings can indicate potential problems such as current leaks, incorrect buffer concentrations, high salt concentrations, or inconsistent chemical quality.

Check band progress after 5 minutes, and again after an hour, noting the migration rate of the tracking dye. The run is complete when the tracking dye reaches the bottom of the gel. Watch the buffer level and, if necessary, replenish it as required to keep the top electrode submerged. (A small volume of buffer may leak past a nicked plate or gasket, or buffer may pass through the gel.)

2.6. After electrophoresis

Tip: To avoid splashing, add staining or fixative solution to the tray after the gel is transferred.

❶

Once the tracking dye reaches the bottom of the gel, turn off the power supply and disconnect the leads. Remove the safety lid, using finger leverage—rest your thumbs on the top of the cams and gently pull the lid up with your index fingers. Once loose, lift the lid straight up and then out to clear the ledge on the upper buffer chamber.

❷

Pour out the buffer by inverting the unit over a sink. Release the upper buffer chamber by removing the cams. Lift the chamber off and lift the sandwich out of the lower chamber.

Note: Use only flexible plastic prying tools to avoid chipping the glass plates.

❸

Unscrew the clamps from the sandwiches and remove. Gently loosen and then slide away both spacers. Use the Wonder Wedge plate separator tool to separate the plates.

❹

Carefully lift off one glass plate. *Handle the gel with care to avoid damaging it.* Over an empty stain tray, either invert the plate holding the gel near the bottom of the tray and lift one corner so that the gel drops into the tray, or, if the gel is thick enough to handle, lift it and place into the tray. Add enough fixative or stain to completely submerge the gel.

❺

Clean the unit as described in “Care and maintenance” on page 24.

3. Care and maintenance

Cleaning

- **Rinse with water immediately after use.**
- **Do not autoclave or heat any part of the instrument above 45 °C.**
- **Do not use organic solvents, abrasives, strong cleaning solutions, or strong acids or bases to clean any plastic part.**
- **Do not soak the gaskets. Clean with a mild detergent and allow to air dry.**
- **Handle the safety lid with care to prevent damage to the electrode connectors.**

Clean glass plates and spacers with a dilute solution of a laboratory cleanser such as RBS-35™ (Pierce Chemical Co.), then rinse thoroughly with tap and distilled water. Glass plates can also be treated with (but not stored in) acid cleaning solutions.

4. Troubleshooting

problem/possible cause	remedy
Gel sandwich leaks while casting	
Dirty or damaged components	Plates, spacers, and the gasket must be completely clean. Wash if necessary.
	Replace chipped plates (especially if chipped near the spacers).
	Check the caster gasket for cuts or cracks and replace if necessary.
Mis-aligned parts	Check plate and spacer alignment and realign if necessary.
Over-clamping	Turn cam only as far as necessary to create a seal (usually 90–150°, but up to 180°).
	On each spacer apply a *light* film of GelSeal compound to the bottom *outside* corner only. Do not use silicone grease.
Sample wells damaged or irregular	
Air bubbles	Remove air bubbles before inserting combs. Slide comb into solution at an angle. If comb must be removed, add more monomer solution before reinserting the comb.
Incomplete or delayed polymerization	Allow acrylamide gels to set for a minimum of 1 h.
Debris in wells	Rinse out unpolymerized gel with sample buffer.
Comb removal	Remove the comb at a slight angle and very slowly to prevent damaging the gel.
	Agarose gels: Lower the comb no more than 1 cm into the gel.
Incomplete gel polymerization	
Chemicals	Use only recent stocks of the highest-quality reagents.
	If the dry ammonium persulphate does not crackle when added to water, replace with fresh stock.
	Increase TEMED or APS concentration, or both.
pH	Solutions with extreme pH values (especially acidic) may not polymerize.
Oxygen	Remove oxygen from the gel environment: Degas the monomer solution 5–10 min before pouring and then overlay the gel surface with water-saturated *n*-butanol.
Temperature	Adjust the gel solution temperature to a minimum of 20 °C, especially for low %T gels.

problem/possible cause	remedy
Upper buffer chamber leaks	
Mis-aligned parts	Check that the glass plates, spacers, and clamps are aligned and fit snugly into the upper chamber gasket.
	Check that both gaskets are centered and that the positioning ridges fit inside the grooves.
Dirty or damaged components	Check that the gasket is not damaged or pinched. Replace if necessary. Check that the upper buffer chamber is not warped from prior exposure to excessive heat.
Dye front curves up (smiles) at edges	
Excessive heat	Prechill the buffer.
	Decrease the current or voltage setting.
	Run the gel in the cold room.
Protein streaks vertically	
Particulates in sample	Centrifuge or filter sample before loading to remove particulates.
Overloading	Load less sample.
Degradation	Add protease inhibitor such as PMSF.
Unusually slow (or fast) run	
Current leakage around gel	Check for leaks; all plates and spacers must be aligned and free of grease and cracks.
Sample or reagent preparation	If the required pH of a solution is overshot, do not back-titrate. Discard and prepare fresh buffer.
	Check recipes, gel concentrations, and buffer dilution. (For instance, do not use Tris-HCl instead of Tris for Laemmli tank buffer.)
	Decrease the salt concentration of samples.
Reagent quality	Dispose of older acrylamide solutions and use only stock of the highest quality.
	Use only freshly deionized urea.
Voltage or current settings	To increase or decrease the migration rate, adjust the voltage or current by 25–50%.
Bands are skewed or distorted	
Incomplete gel preparation and polymerization	Degas the stacking-gel solution and avoid trapping air bubbles under the comb teeth.
Irregular interface between stacking and running gels	Overlay the running gel with water-saturated butanol before polymerization begins, to avoid forming an uneven gel surface.
Sample preparation	Dialyze or desalt the sample.

problem/possible cause	remedy
Stained sample collects:	
Near the buffer front	
Gel concentration	Molecules are not sufficiently restricted by the resolving gel pore size: increase the %T.
Degradation	Proteins may be degraded by endogenous proteases: use protease inhibitors during the isolation step.
Near the top of the gel when the buffer front has reached the bottom	
Gel concentration	The gel pore size is too small: decrease the %T of the resolving (or stacking) gel.
Precipitation	The protein has precipitated. Heat the sample at a lower temperature (70 °C or less) for 1–2 min.
At both top and bottom of the gel	
Gel concentration	The molecular weight range of the sample requires an acrylamide concentration gradient to resolve the full range of protein sizes.
Poor band resolution	
Running conditions	Begin electrophoresis as soon as the sample is loaded to prevent low molecular weight species from diffusing.
	Conduct the separation at a lower current or voltage setting to reduce Joule heating.
Reagent quality	Use only the highest-quality reagents.
Poor stacking	Use only gels that were recently prepared.
	Add a stacking gel or increase height of the stacking gel. Prepare the resolving-gel surface by first rinsing it with stacking-gel monomer before pouring the stacking gel to ensure continuity between the gels.
	Check pH values of the resolving- and stacking-gel solutions. Do not back-titrate buffers.
Incomplete gel polymerization	Allow gel to polymerize fully.
Sample preparation	Store sample on ice before it is denatured.
	Dialyze or desalt the sample.
	Heat samples in SDS sample buffer for no more than 1–2 min at 100 °C to improve dissociation of subunits. Store on ice after heating.
	Adjust the sample volume or concentration.
	Add more mercaptoethanol or dithiothreitol; check sample treatment.
	Add protease inhibitors such as PMSF if necessary to prevent proteolytic degradation of sample.
	Increase glycerol or sucrose to increase sample density.
	Store samples to be frozen in aliquots to avoid repeated freeze-thawing. Store at -40 to -80 °C.

problem/possible cause	remedy
Tracking dye doesn't sharpen into a concentrated zone in the stacking gel	
Poor stacking	Pour a taller stacking gel. (For best results, allow a stacking-gel height of 2.5 times the height of the sample in the well.)
Reagent quality	Dispose of outdated acrylamide solutions and use only the highest grade of acrylamide.
Sample preparation	When preparing samples, avoid using solutions with high salt concentrations.

Appendix A. Laemmli System Gels

Table 4. Laemmli gels — final concentrations

	Resolving gel	Stacking gel	Electrophoresis buffer
Acrylamide conc.	10% T*, 2.6% C	4% T, 2.6% C	
Tris-Cl	0.375 M	0.125 M	
Tris-Glycine			0.025 M Tris base 0.192 M glycine
pH	8.8	6.8	~8.3
SDS	0.1%	0.1%	0.1%
APS†	0.05% w/v	0.05–0.1% w/v	
TEMED‡	0.05% v/v	0.05–0.1% v/v	

*To achieve any other desired final concentration, adjust the acrylamide stock and water volumes. Volumes for different concentrations are listed in Table 5.

†Ammonium persulfate.

‡Tetramethylethylenediamine

The Laemmli system is the most common electrophoresis protocol for SDS-denatured proteins. The leading ion in this discontinuous buffer system is chloride and the trailing ion is glycine. Accordingly, the resolving gel and the stacking gel contain Tris-Cl buffers (of different concentration and pH), and the electrophoresis buffer contains Tris-glycine. All buffers contain 0.1% SDS.

Polyacrylamide gel composition is indicated by two different percentages:

Caution! Acrylamide is a neurotoxin. Always wear gloves while handling in any form and wear a mask while weighing the powder. Never mouth pipette the solution.

$$\%T = \frac{g(\text{acrylamide} + \text{bisacrylamide})}{100\ \text{ml}} \times 100$$

$$\%C = \frac{g(\text{bisacrylamide})}{g(\text{acrylamide} + \text{bisacrylamide})} \times 100$$

The total percent of acrylamide (%T) in the resolving gel, which can range from 4 to 20%, determines the pore size. Commonly, the amount of crosslinker used (%C) is 2.6%. In the following system example, the resolving gel composition is 10%T, 2.6%C, which results in a medium pore size. The stacking gel composition is 4%T, 2.6%C. The %T in the stacking gel is lower because a larger pore size is required.

Note: Filter solutions 1–4 through a 0.45 µm filter.

Important! Refer to the material safety data sheet (MSDS) accompanying each chemical for detailed handling and safety information.

Solutions

1. Acrylamide stock solution

(30.8% T 2.6% C Bis, 200 ml)

Acrylamide (FW 71.08)	30% w/v	60.0 g
Bis* (FW 154.2)	0.8% w/v	1.6 g
Deionized H_2O		to 200.0 ml

Store at 4 °C away from light.
*N,N' Methylenebisacrylamide

2. 4X Resolving gel buffer

(1.5 M TrisCl, pH 8.8, 1 liter)

Tris base (FW 121.1)	1.5 M	181.5 g
HCl		to pH 8.8
Deionized H_2O		to 1000 ml

Store up to 3 months at 4 °C in the dark.

3. 4X Stacking gel buffer

(0.5 M TrisCl, pH 6.8, 500 ml)

Tris base (FW 121.1)	0.5 M	30.3 g
HCl		to pH 6.8
Deionized H_2O		to 500 m

Store up to 3 months at 4 °C in the dark.

4. 10% SDS solution

(100 ml)

SDS* (FW 288.4)	0.35 M	10.0 g
Deionized H_2O		to 100 ml

Store up to 6 months at room temperature.
*Sodium dodecylsulfate

5. 10% APS (Initiator)

(1 ml)

APS* (FW 228.2)	0.44 mm	0.1 g
Deionized H_2O		to 1.0 ml

Fresh APS "crackles" when water is added. If yours does not, replace it with fresh stock. Prepare just prior to use.
*Ammonium persulfate

6. Resolving gel overlay

(0.375 M TrisCl, 0.1% SDS, pH 8.8, 100 ml)

1.5 M Tris-Cl, pH 8.8 (Solution #2)	0.375 M	25.0 ml
10% SDS (Solution #4)	3.5 mm	1.0 ml
Deionized H_2O		to 100.0 ml

Store up to 3 months at 4 °C in the dark.

—OR—

Water-saturated *n*-butanol

Shake *n*-butanol and deionized H_2O in a separatory funnel. Remove the aqueous (lower) phase. Repeat this procedure several times. Use the upper phase.

—OR—

If an overlay interferes with the preferred protocol, isolate the gel from atmospheric oxygen by placing a preparative comb or resolving gel former on the gel.

7. 2X Sample treatment buffer

(0.125 M TrisCl, 4% SDS, 20% glycerol, 0.2 mM DTT, pH 6.8, 10 ml)*

0.5 M Tris Cl, pH 6.8 (Solution #3)	0.125 M	2.5 ml
10% SDS, 0.35 M (Solution #4)	0.14 M	4.0 ml
Glycerol (FW 92.09)	20% v/v	2.0 ml
Dithiothreitol (DTT) (FW 154.2)	0.2 mM	0.31 g
Bromphenol Blue (FW 691.9)	0.3 mM	2.0 mg
Deionized H_2O		to 10.0 ml
or 2-mercaptoethanol (FW 78.13)	2% v/v	0.2 ml

Divide into 1.0 ml aliquots and store at -40 °C to -80 °C for up to 6 months.

—OR—

6X Sample treatment buffer

(0.35 M TrisCl, 10% SDS, 30% glycerol, 9.3% DTT, pH 6.8, ~10 ml)

0.5 M TrisCl, pH 6.8 (Solution #3)	0.35 M	7.0 ml
SDS (FW 288.4)	0.35 M	1.0 g
Glycerol (FW 92.09)	30% v/v	3.0 ml
DTT (FW 154.2)	0.6 M	0.93 g
Bromphenol Blue (FW 691.9)	0.175 mm	1.2 mg

Divide into 1.0 ml aliquots and store at -70 °C.

8. Electrophoresis buffer

(0.025 M Tris, 0.192 M glycine, 0.1% SDS, pH 8.3, 5.0 liters)

Tris (FW 121.1)	0.025 M	15.1 g
Glycine (FW 75.07)	0.192 M	72.1 g
SDS (FW 288.4)	3.5 mm	5.0 g
Deionized H_2O		to 5.0 liters

The pH of this buffer is approximately 8.3. Do not adjust pH.
Up to 20 liters can be prepared and stored for up to 2 months.

9. Coomassie stain solution

(0.025% Coomassie Blue R-250, 40% Methanol, 7% Acetic acid, 2 liters)

Coomassie Blue R-250 (FW 826)	0.3 mm	0.5 g
Methanol (Stir until dissolved)	40% v/v	800.0 ml
Acetic acid	7% v/v	140.0 ml
Deionized H_2O		to 2.0 liters

10. Destain solution I

(40% methanol, 7% acetic acid, 1 liter)

Methanol	40% v/v	400.0 ml
Acetic acid	7% v/v	70.0 ml
Deionized H_2O		to 1.0 liter

11. Destain solution II

(7% acetic acid, 5% methanol)

Methanol	5% v/v	50.0 ml
Acetic acid	7% v/v	70.0 ml
Deionized H_2O		to 1.0 liter

12. Cross-linking solution

(10% glutaraldehyde)

20 ml of 50% glutaraldehyde stock
Distilled water to 100 ml.

Caution! Glutaraldehyde should only be handled in a fume hood.

13. DTT (dithiothreitol) solution

(5 µg/ml)

5 mg DTT

Bring to 1 L with ddH_2O.

14. Silver Nitrate solution

(0.1% w/v silver nitrate)

1 g silver nitrate

Distilled water 1 to L.

15. 3% Sodium Carbonate solution

(3% w/v)

60 g sodium carbonate

Bring to 2 L with distilled water, store in glass container.

16. Developing solution

(3% sodium carbonate, 0.019% formaldehyde)

200 ml of 3% sodium carbonate

100 µl of 37% formaldehyde

Prepare just before use.

17. Stop solution

(2.3 M sodium citrate)

67.64 sodium citrate, dihydrate (FW 294.1)

Bring to a final volume of 100 ml with deionized water.

Coomassie Stain Protocol

A. Stain gel in coomassie stain solution at room temperature overnight. Gels can also be stained rapidly by placing them at 55 °C in a shaking water bath for 30–45 min.

B. Place gel in Destain solution I at room temperature. Change the destain solution when it reaches a deep blue color until clear background results.

C. Store the gel in Destain solution II.

For a more sensitive method, silver stain protocol is recommended.

Silver Stain Protocol

(adapted from Morrissey, 1981)

Gentle agitation is recommended throughout this procedure.

Note: Because this is a highly sensitive staining method, it is important to wear gloves when handling gels and to use clean containers. To reduce the background, use only high-purity reagents and remove all buffer from the gels during the fixing and destaining steps.

A. Stain the gel as usual with Coomassie Blue. Destain the gel with several changes of Destain solution II.

—OR—

Fix the gel in 100 ml Destain solution I for 30 minutes, then place the gel in 100–200 ml Destain solution II for 30 minutes. Discard the solution, refill, and wash with Destain solution II a second 30 minutes.

B. Transfer the gel to 100 ml crosslinking solution for 30 minutes.

C. Decant the glutaraldehyde and rinse the gel with several changes of deionized water over a period of two hours.

—OR—

Soak the gel in 500 ml of deionized water overnight. The next day, rinse the gel with several changes of deionized water over 30–60 minutes.

D. Place the gel in 100–200 ml of 5 µg/ml DTT in deionized water for 30 minutes.

E. Pour off the DTT solution but do not rinse the gel. Add 100 ml of silver nitrate solution directly to the gel. Shake gently for 30 minutes and then rinse the gel for 1–2 seconds with deionized water.

F. Add 50 ml of developer solution, quickly swirl the gel, and pour off developer. Repeat once more.

Add 100 ml of developer and agitate until the bands are visible. Be sure to stop the development before the background becomes significant by neutralizing the solution with 5 ml of stop solution. Alternatively, pour off developer and add 100 ml Destain solution II.

Note: Some bleaching may occur if using Destain solution II as a stop solution.

G. Wash the gel in 2–3 changes of deionized water. Keep the gel in Destain solution II or dry it for permanent storage.

Gel recipes

The Laemmli gel recipes are for 30 ml of a single concentration solution (enough for one 1.5-mm 18 × 16 cm gel). Tabulated are ingredients and volumes for relatively large pore gels (7.5 to 10%T range) as well as smaller pore gels (12.5 to 15%T range). A 4% stacking gel is common. The linear gradient recipe is for 100 ml of solution. The total volume needed depends on the number of gels cast and the gel thickness; adjust as necessary. All gels are crosslinked with 2.6%C.

Table 5. Laemmli gel recipes
(per 30 ml resolving gel solution, 5 ml stacking gel solution)

	Resolving gel				Stacking gel
	7.5%	**10%**	**12.5%**	**15%**	**4%**
Acrylamide stock (Soln. #1)	7.5 ml	10 ml	12.5 ml	15 ml	0.67 ml
1.5 M TrisCl, pH 8.8 (Soln. #2)	7.5 ml	7.5 ml	7.5 ml	7.5 ml	
0.5 M TrisCl, pH 6.8 (Soln. #3)					1.25 ml
10% SDS (Soln. #4)	0.3 ml	0.3 ml	0.3 ml	0.3 ml	0.05 ml
Deionized H_2O	14.6 ml	12.1 ml	9.6 ml	7.1 ml	3.00 ml
10% APS (Soln. #5)	150 µl	150 µl	150 µl	150 µl	25 µl
TEMED	10 µl	10 µl	10 µl	10 µl	2.5 µl
Final Volume	30.0	30.0 ml	30.0 ml	30.0 ml	5.0 ml

For linear gradient gels, use equal volumes of low % and high % acrylamide solutions. Less APS is added to extend polymerization time, and less still is added to the higher %T solution to allow polymerization to occur from the top down. In our experience with the concentrations in the 10–20% gradient example below, ten gel sandwiches can be poured in a multiple gel caster at a flow rate of 5–10 ml/min.

Table 6. Linear gradient gel recipes (per 100 ml solution)

	10% T	**20% T**
Acrylamide stock (Solution #1)	33.30 ml	66.70 ml
Sucrose	—	15.00 g
1.5 M TrisCl, pH 8.8 (Solution #2)	25.00 ml	25.00 ml
10% SDS (Solution #4)	1.00 ml	1.00 ml
Deionized H_2O	to 100.00 ml	to 100.00 ml
10% APS (Solution #5)	0.300 ml	0.060 ml
TEMED	0.036 ml	0.036 ml

Appendix B. Bibliography

General

Gallagher, S.R., and J.A. Smith., Electrophoretic separation of proteins. In *Current Protocols in Molecular Biology.* (F.A. Ausubel, et. al, eds.) 10.2.1–10.2.21 (1991).

Hames, B. D. and Rickwood, D., Gel Electrophoresis of Proteins, A Practical Approach. Second edition, IRL Press (1990).

Sambrook, J, Fritsch, E.F. and Maniatis, T., Standard Formaldehyde Protocol. Molecular Cloning: A Laboratory Manual. Cold Spring Harbor Laboratory, Cold Spring Harbor, NY (1990).

Sasse, J., and Gallagher, S.R., Staining proteins in gels. *Current Protocols in Molecular Biology.* (F.A. Ausubel, R. Brent, R.E. Kingston, D.D. Moore, J.G. Seidman, J.A. Smith, and K. Struhl, eds.) 10.6.1–10.6.8 (1991).

Denaturing gel systems

Laemmli, U.K. Cleavage of structural proteins during the assembly of the head of bacteriophage T. *Nature*. **227**, 680–685 (1970).

Matsudaira, P.T. and Burgess, D.R., SDS microslab linear gradient polyacrylamide gel electrophoresis. *Anal. Biochem*. **87**, 386–396 (1978).

Schreier, M.H., Erni, B. and Staehelin, T., SDS gels, pH 8.8. *J. Mol. Biol.* **116**, 727–752 (1977).

Shapiro, A.L. and Maizel, J.V. Jr., Molecular weight estimation for polypeptides. *Anal. Biochem.* **29**, 505–514 (1969).

Schaegger, H. and Von Jagow, G., Tricine-sodium dodecyl sulfate-polyacrylamide gel electrophoresis for the separation of proteins in the range from 1 to 100 kDa. *Anal. Biochem*. **166**, 368–379 (1987).

Weber, K., and Osborn, M., The reliability of molecular weight determinators by dodecyl sulfate-polyacrylamide gel electrophoresis. *J. Biol. Chem.* **224**, 4406–4412 (1969).

Native gel systems

Reisfeld, R.A., *et al.*, Acidic buffer system for resolution of cationic proteins. *Nature*. **195**, 281 (1962).

McLellan, T. Electrophoresis buffers for polyacrylamide gels at various pH values. *Anal. Biochem.* **126**, 94 (1982).

Hedrick, J.L. and Smith, A.J., Size and charge isomer separation and estimation of molecular weights of proteins by discontinuous gel electrophoresis. *Arch. Biochem. Biophys*. **126**, 155 (1968).

Two-dimensional electrophoresis

Adams, L.D. and Gallagher, S.R., Two-Dimensional Gel Electrophoresis Using the O'Farrell System. *Current Protocols in Molecular Biology*, pp. 10.4.1–10.4.13 (1992).

Anderson, N.G., Anderson, N.L., and Tollaksen, S.L., *Clin. Chem.* **25**, 1199–1210 (1979).

Anderson, N.L. and Anderson, N.G., *Proc. Natl. Acad. Sci.* USA. **74**, 5421–5425 (1977).

Bravo, R., *et al.*, *Proc. Natl. Acad. Sci.* USA. **79**, 2281–2285 (1982).

Hurkman, W.J. and Tanaka L.K., *Plant Physiology*. **81**, 802–906 (1986).

Mets, L.J. and Bogorad. *Anal. Biochem.* **57**, 200–210 (1974).

O'Farrell, P.H. *J. Biol. Chem.* **250**, 4007–4021 (1975).

Ordering information

product	quantity	product number
Hoefer SE 400 Sturdier Vertical Slab Electrophoresis Units		
for 18 × 16 cm gels		
SE 400 Sturdier Vertical Unit, complete. Includes: one set of glass plates 18 × 16 cm, 2 clamps assemblies, 2 cams and 15-well comb and 2 spacers, 1.5-mm thick. (Other size combs and spacers ordered separately.)	1	SE400-15-1.5
for 18 × 24 cm gels		
SE 410 Sturdier Vertical Slab Electrophoresis Unit, complete. Includes: one set of glass plates 18 × 24 cm, two 16 cm and two 8 cm clamp assemblies, and 2 cams. (Order combs and spacers separately.)	1	SE410
Replacement parts		
Slotted silicone rubber gasket for upper buffer chamber	1	SE4008B
Blank silicone rubber gasket for casting stand	1	SE4009
Lid with electrodes for SE 400, 16 cm	1	SE4156
Lid with electrodes for SE 410, 24 cm	1	SE416
Lower buffer chamber/casting stand	1	SE4151
Upper buffer chamber with gasket	1	SE4154
High voltage safety lead set	1	SE6056-HV
Wonder Wedge plastic gel plate separation tool	1	SE1514
GelSeal, 1/4 oz. tube	1	SE6070
Clamps and Cams		
Clamp and Cam Kit, four 16-cm clamps and 8 black cams	1	SE6003UK
Replacement thumbscrews for clamps	12	SE6003U-2
Cams, black, for new-style clamps with cam holes	4	SE6005L
Clamp assemblies, 8 cm	2	SE6403U
Clamp assemblies, 16 cm	2	SE6003U
Glass Plates		
18 × 16 cm		
Glass plates	2	SE6102
Glass plate, club sandwich divider, notched	1	SE6102D
18 × 24 cm		
Glass plates	2	SE6602
Glass plate, club sandwich divider, notched	1	SE6602D

product			quantity	product number

Teflon combs

number of wells	thickness (mm)	width (mm)		
10	0.75	8.3	1	SE511-10-.75
10	1.00	8.3	1	SE511-10-1.0
10	1.50	8.3	1	SE511-10-1.5
12	0.75	7.6	1	SE511-12-.75
12	1.00	7.6	1	SE511-12-1.0
12	1.50	7.6	1	SE511-12-1.5
15	0.75	5.7	1	SE511-15-.75
15	1.00	5.7	1	SE511-15-1.0
15	1.50	5.7	1	SE511-15-1.5
20	0.75	4.1	1	SE511-20-.75
20	1.00	4.1	1	SE511-20-1.0
20	1.50	4.1	1	SE511-20-1.5
28[b]	0.75	2.7	1	SE511-28-.75
28[b]	1.00	2.7	1	SE511-28-1.0
28[b]	1.50	2.7	1	SE511-28-1.5

[a]Also for use with the Hoefer PR 200 Deca-Probe Incubation Manifold.
[b]Comb depth 15 mm; all others 25 mm.

Preparative combs

These combs are 25 mm deep, adjustable to 10 or 15 mm.

no. of wells prep/ref	thickness (mm)	width (mm) prep/ref		
1/1	0.75	121/6	1	SE511-R-.75
1/1	1	121/6	1	SE511-R-1.0
1/1	1.50	121/6	1	SE511-R-1.5
1/2	0.75	113/6	1	SE511-DR-.75
1/2	1	113/6	1	SE511-DR-1.0
1/2	1.50	113/6	1	SE511-DR-1.5

Adjustable comb back Required to convert any 25-mm deep comb to 10 or 15 mm depth.	1	SE511-BKA

product			quantity	product number

Spacers

thickness (mm)	length (cm)	width (cm)		
0.75	16	2	2	SE6119-2-.75
1.0	16	2	2	SE6119-2-1.0
1.5	16	2	2	SE6119-2-1.5
1.0	16	1	2	SE6118-2-1.0
1.5	16	1	2	SE6118-2-1.5
0.75	24	2	2	SE6619-2-.75
1.00	24	2	2	SE6619-2-1.0
1.50	24	2	2	SE6619-2-1.5

Gel Casters

Order combs and spacers separately.

For up to 4 gels

Gel Caster Kit, 4 gels, 18 × 16 cm. Includes: 8 glass plates, 3 space-saver plates, 5 filler sheets, 100 sheets of wax paper, Spacer-Mate alignment template, and filler plugs.	1	SE675

For up to 10 gels

Multiple Gel Caster Kit, 10 gels, 18 × 16 cm Includes: 20 glass plates, space-saver plate, 5 filler sheets, 100 sheets of wax paper, and Space Mate alignment template.	1	SE615

Recommended

Hoefer SE 100 Plate Mate washing and storage unit.	1	SE100

Coomassie is a trademark of ICI plc.

RBS-35 is a trademark of Pierce Chemical Co.

Teflon is a trademark of E.I. du Pont de Nemours & Co.

Printed in the USA

Hoefer, Inc.
953 Indiana Street
San Francisco, CA
94107 USA

www.hoeferinc.com

Hoefer